View offers
Book a test drive
Find a Retailer
View the Range Guide

E-Class Coupé and Cabriolet



Effective from 1 December 2017 Production.

Mercedes-Benz

Contents

Model prices 8

Finance offers 10

4MATIC All-Wheel Drive 14

AMG Line 15

Premium and Premium Plus equipment lines 17

Pricing summary for model and equipment lines 19

Standard equipment 20

Wheels 26

Lane Tracking package 28

Driving Assistance package 29

COMAND Online system 30

Night package 31

Optional equipment 32

Mercedes me applications and services 37

Genuine Accessories 39

Colours and materials 42

Technical data 47

Road Fund Licence 55

Services and insurance 56

Mercedes me 57

Mercedes-Benz Finance 59

The hard facts to melt your heart

At Mercedes-Benz we appreciate the importance of detail. Over the following pages you'll find model prices and a breakdown of standard and optional equipment, as well as details of the comprehensive services and benefits that are available to every Mercedes-Benz driver.

See Mercedes-Benz in a new light. Now is the time to get yourself behind the wheel of an E-Class. Choose from a number of attractive finance offers. Please see pages 10–13 for further details, or visit www.mercedes-benz.co.uk/offers

Of course, some things have to be experienced to be truly appreciated, such as the qualities that set a Mercedes-Benz apart. Which is why we'd like to invite you for a test drive at your local Mercedes-Benz Retailer. Alternatively, you can make arrangements by visiting www.mercedes-benz.co.uk/testdrive

For more information visit www.mercedes-benz.co.uk or call 0333 222 0500.



Some of the model features, optional extras and colours shown may not be available, or may only be available in a different specification.



Some of the model features, optional extras and colours shown may not be available, or may only be available in a different specification.



Some of the model features, optional extras and colours shown may not be available, or may only be available in a different specification.



Some of the model features, optional extras and colours shown may not be available, or may only be available in a different specification.

Model prices – Coupé

Engine	Model line	Transmission	CO_2	Basic RRP excl. VAT (£)	Total RRP incl. VAT (£)	Road Fund Licence (£)[1]	Rec. OTR price (£)[2]	P11D value (£)	BiK tax rate 2017/18 (%)
E 220 d Diesel – 1,950 cc, 4-cylinder, 194 hp/143 kW	AMG Line	9G-TRONIC PLUS 9-speed automatic	119	32,754.17	39,305.00	160.00	40,180.00	39,965.00	25
E 220 d 4MATIC Diesel – 1,950 cc, 4-cylinder, 194 hp/143 kW	AMG Line	9G-TRONIC PLUS 9-speed automatic	137	34,087.50	40,905.00	200.00	41,820.00	41,565.00	29
E 350 d 4MATIC Diesel – 2,987 cc, 6-cylinder, 258 hp/190 kW	AMG Line	9G-TRONIC PLUS 9-speed automatic	174	41,583.33	49,900.00	800.00	51,415.00	50,560.00	36
E 300 Petrol – 1,991 cc, 4-cylinder, 245 hp/180 kW	AMG Line	9G-TRONIC PLUS 9-speed automatic	160	33,212.50	39,855.00	500.00	41,070.00	40,515.00	31
E 400 4MATIC Petrol – 2,996 cc, 6-cylinder, 333 hp/245 kW	AMG Line	9G-TRONIC PLUS 9-speed automatic	189	41,087.50	49,305.00	800.00	50,820.00	49,965.00	36

[1] A different first year rate of Vehicle Excise Duty (Road Fund Licence) applies for new cars. Please refer to page 55 for the relevant rate for the second and subsequent years

[2] The recommended on-the-road price includes the Road Fund Licence applicable to the standard model plus delivery charge (£635.00 incl. VAT), new vehicle registration fee (£55.00) and number plates (£25.00 incl. VAT). VAT is calculated at the standard rate of 20%

Model prices – Cabriolet

Engine	Model line	Transmission	CO_2	Basic RRP excl. VAT (£)	Total RRP incl. VAT (£)	Road Fund Licence (£)[1]	Rec. OTR price (£)[2]	P11D value (£)	BiK tax rate 2017/18 (%)
E 220 d Diesel – 1,950 cc, 4-cylinder, 194 hp/143 kW	AMG Line	9G-TRONIC PLUS 9-speed automatic	126	36,500.00	43,800.00	160.00	44,675.00	44,460.00	27
E 220 d 4MATIC Diesel – 1,950 cc, 4-cylinder, 194 hp/143 kW	AMG Line	9G-TRONIC PLUS 9-speed automatic	146	37,833.33	45,400.00	200.00	46,315.00	46,060.00	31
E 350 d 4MATIC Diesel – 2,987 cc, 6-cylinder, 258 hp/190 kW	AMG Line	9G-TRONIC PLUS 9-speed automatic	179	45,329.17	54,395.00	800.00	55,910.00	55,055.00	37
E 300 Petrol – 1,991 cc, 4-cylinder, 245 hp/180 kW	AMG Line	9G-TRONIC PLUS 9-speed automatic	167	36,958.33	44,350.00	500.00	45,565.00	45,010.00	32
E 400 4MATIC Petrol – 2,996 cc, 6-cylinder, 333 hp/245 kW	AMG Line	9G-TRONIC PLUS 9-speed automatic	194	44,833.33	53,800.00	1,200.00	55,715.00	54,460.00	37

[1] A different first year rate of Vehicle Excise Duty (Road Fund Licence) applies for new cars. Please refer to page 55 for the relevant rate for the second and subsequent years

[2] The recommended on-the-road price includes the Road Fund Licence applicable to the standard model plus delivery charge (£635.00 incl. VAT), new vehicle registration fee (£55.00) and number plates (£25.00 incl. VAT). VAT is calculated at the standard rate of 20%

Mercedes-Benz Finance

Where the clever money goes

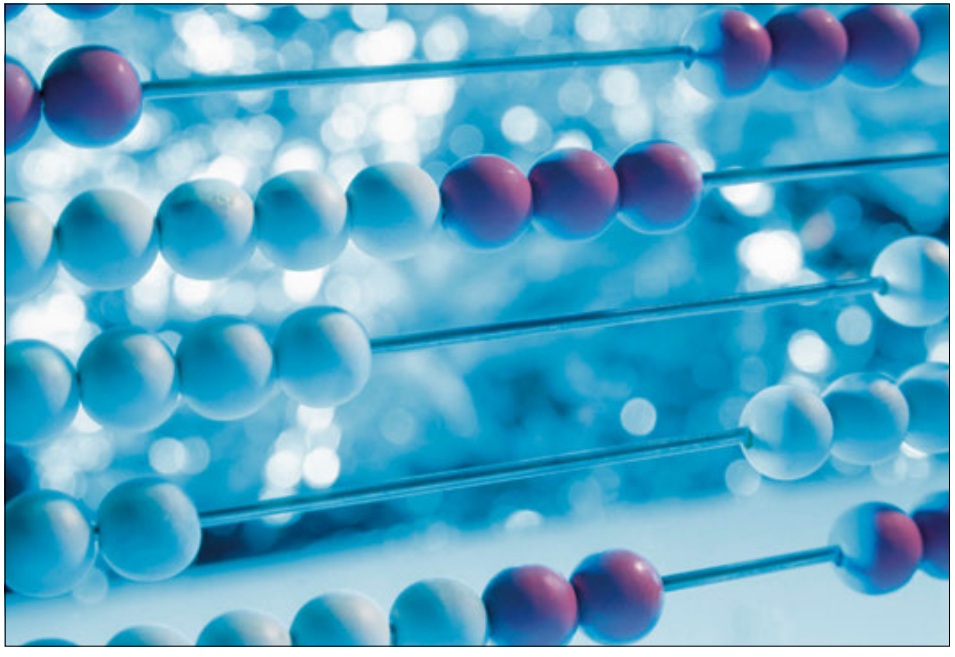

E 220 d AMG Line Coupé with optional metallic paint
(representative example)
Based on 10,000 miles per annum

48 monthly payments of[1]	**£499.00**
Customer deposit	**£5,105.93**
On-the-road price	**£40,865.00**
Optional purchase payment[2]	**£17,875.00**
Amount of credit	**£35,759.07**
Duration of agreement	**48 months**
Total amount payable[3]	**£46,942.93**
Purchase activation fee[2]	**£10.00**
APR	**5.7%**
Fixed interest rate	**5.55%**
Excess mileage	**15.6p per mile**

Example offer – 5.7% APR Representative	Automatic	Metallic	On-the-road price	Customer deposit	48 monthly payments of[1]
E 220 d AMG Line Coupé	●	○	£40,865.00	£5,105.93	£499.00

● Standard equipment ○ Optional equipment included in the price

Mercedes-Benz Service Care

- Mercedes-Benz trained Technicians
- Maintained by Mercedes-Benz Official Workshops
- Meets requirements of Mercedes-Benz Agility finance agreement

Mercedes-Benz Motor Insurance

- 24/7 UK accident recovery
- Only Mercedes-Benz GenuineParts used
- To qualify for up to 10% discount online, go to **www.mercedes-benz.co.uk/motorinsurance**
- Alternatively, call Mercedes-Benz Motor Insurance now on **0345 600 2180**[4] for an annual quote

We may decline to quote in some circumstances. Mercedes-Benz Motor Insurance is underwritten by Aviva Insurance Limited

Content relating to finance is promoted by Mercedes-Benz Finance. Your Retailer may offer finance on behalf of other companies.

Orders/credit approvals on selected E-Class Coupé models only, between 1 January and 31 March 2018, registered by 30 June 2018. Some combinations of features/options may not be available. Please contact your local Mercedes-Benz Retailer for availability

[1]Based on a Mercedes-Benz Agility agreement. Vehicle condition, excess mileage and other charges may be payable. Quotations available on request for alternative contract lengths and mileages. Guarantees may be required. Over 18s only. Credit provided, subject to status, by Mercedes-Benz Finance, MK15 8BA

[2]Payable if you exercise the option to purchase the car

[3]Includes optional purchase payment, purchase activation fee and Retailer deposit contribution (where applicable)

[4]Calls are charged at local rate and may be recorded

Mercedes-Benz Finance

As you'd expect with models of efficiency, the repayments aren't excessive

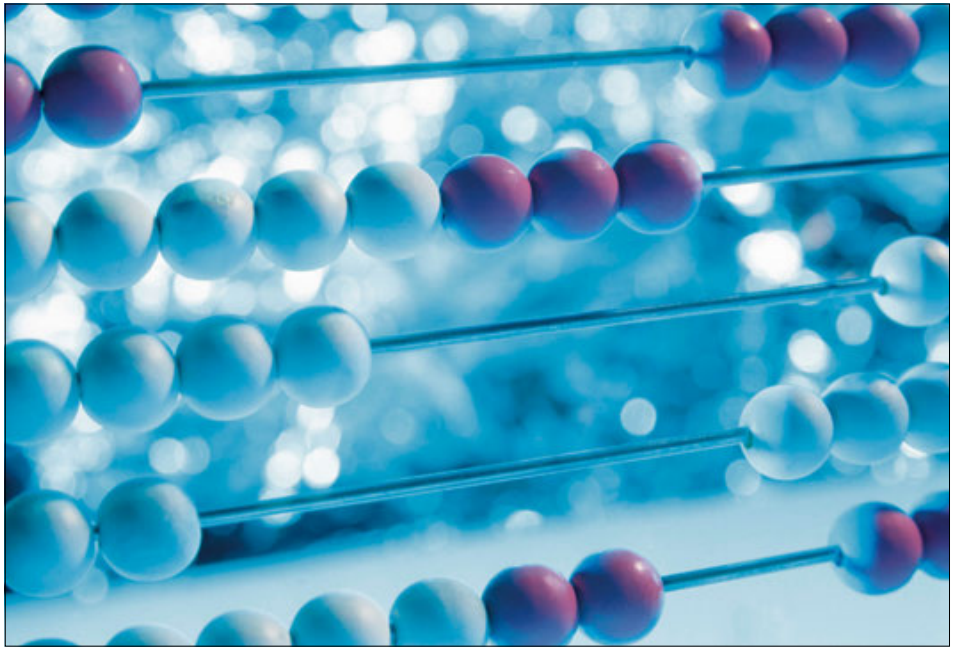

E 220 d AMG Line Cabriolet with optional metallic paint
(representative example)
Based on 10,000 miles per annum

48 monthly payments of[1]	**£519.00**
Customer deposit	**£7,339.48**
On-the-road price	**£45,360.00**
Optional purchase payment[2]	**£19,625.00**
Amount of credit	**£38,020.52**
Duration of agreement	**48 months**
Total amount payable[3]	**£51,886.48**
Purchase activation fee[2]	**£10.00**
APR	**5.7%**
Fixed interest rate	**5.55%**
Excess mileage	**18p per mile**

Example offer – 5.7% APR Representative	Automatic	Metallic	On-the-road price	Customer deposit	48 monthly payments of[1]
E 220 d AMG Line Cabriolet	●	○	£45,360.00	£7,339.48	£519.00

● Standard equipment ○ Optional equipment included in the price

Mercedes-Benz Service Care

- Mercedes-Benz trained Technicians
- Maintained by Mercedes-Benz Official Workshops
- Meets requirements of Mercedes-Benz Agility finance agreement

Mercedes-Benz Motor Insurance

- 24/7 UK accident recovery
- Only Mercedes-Benz GenuineParts used
- To qualify for up to 10% discount online, go to **www.mercedes-benz.co.uk/motorinsurance**
- Alternatively, call Mercedes-Benz Motor Insurance now on **0345 600 2180**[4] for an annual quote

We may decline to quote in some circumstances. Mercedes-Benz Motor Insurance is underwritten by Aviva Insurance Limited

Content relating to finance is promoted by Mercedes-Benz Finance. Your Retailer may offer finance on behalf of other companies.

Orders/credit approvals on selected E-Class Cabriolet models only, between 1 January and 31 March 2018, registered by 30 June 2018. Some combinations of features/options may not be available. Please contact your local Mercedes-Benz Retailer for availability

[1]Based on a Mercedes-Benz Agility agreement. Vehicle condition, excess mileage and other charges may be payable. Quotations available on request for alternative contract lengths and mileages. Guarantees may be required. Over 18s only. Credit provided, subject to status, by Mercedes-Benz Finance, MK15 8BA

[2]Payable if you exercise the option to purchase the car

[3]Includes optional purchase payment, purchase activation fee and Retailer deposit contribution (where applicable)

[4]Calls are charged at local rate and may be recorded

4MATIC all-wheel drive



The 4MATIC all-wheel drive provides more dynamics, comfort and safety on normal roads. Whether you are on road or off road, 4MATIC guarantees optimal traction and excellent handling on any surface, at all times, thanks to the perfect interaction of the individual wheels.

Key benefits:
Precise handling and control
Greater traction and driving stability on slippery surfaces and even on the toughest terrain
Enhanced safety
Optimal traction reduces friction, improving efficiency

Available with E 220 d, E 350 d and E 400 engines: please see pages 8 and 9 for prices.

To find out more about 4MATIC and the full range of Mercedes-Benz 4MATIC vehicles, visit http://mercedes-benz.co.uk/4MATIC

E-Class AMG Line









Optional metallic paint shown. Model shown top left features optional Premium equipment line (code DP0)

The new E-Class AMG Line takes its cues from our AMG performance experts, focused on sporty design as well as athletic handling. AMG bodystyling and perforated brake discs with 'Mercedes-Benz' lettering all complement the look. Innovative technologies include High Performance LED head and tail lamps, Active Parking Assist and reversing camera, SD card-based navigation and Audio 20 USB multimedia system.

The interior is equipped with black ARTICO leather[1]/DINAMICA microfibre and black open-pore ash wood trim on dashboard and centre console. Heated front seats with partial electric adjustment and four-way lumbar support come as standard. This is further complemented by ambient lighting, KEYLESS-GO starting function and a 3-spoke multifunction AMG steering wheel in black nappa leather with flattened bottom section.

Exterior
Mirror package
19" AMG alloy wheels – 5-twin-spoke design with run-flat tyres
Active Brake Assist
AGILITY CONTROL suspension with selective damping
AIR BODY CONTROL air suspension (E 350 d/E 400 4MATIC only)
AMG bodystyling – front and rear apron, side sill panels
Brake discs – perforated, with 'Mercedes-Benz' lettering
Cruise control with variable speed limiter
DYNAMIC SELECT with a choice of driving modes (ECO, Comfort, Sport, Sport+ and Individual)
Headlamps – High Performance LED head and tail lamps
MAGIC VISION CONTROL – heated windscreen wiper system
Sports exhaust system (E 300 only)

Interior
AIRCAP – wind deflector and draught-stop (Cabriolet only)
AIRSCARF – neck-level heating system (Cabriolet only)
Ambient lighting – 64 colours
Audio 20 USB multimedia system with 8.4" display
Brushed stainless steel AMG sports pedals with black rubber studs
COMAND Online[2] with 12.3-inch media display (E 350 d/E 400 4MATIC only)
DAB digital radio tuner
Front seats – belt feeder automatically positions seat belts for easier reach after entry
Front seats – heated with partial electric adjustment and electro-pneumatic four-way lumbar support
SD card-based navigation system
Illuminated door sill panels with 'Mercedes-Benz' lettering
KEYLESS-GO starting function
Rear seats – split folding 40:20:40 (Coupé)/50:50 (Cabriolet)
Steering wheel - 3-spoke multifunction AMG steering wheel in black nappa leather with flattened bottom section, chrome inserts and touch-control buttons
Upper section of dashboard in black ARTICO leather[1] with topstitching

Trim and Upholstery

Black open-pore ash wood trim



ARTICO leather[1]/DINAMICA microfibre – black



[1]Man-made leather [2]COMAND Online functionality and Wi-Fi connectivity is dependent on a compatible cellular data connection. Please check with your local Mercedes-Benz Retailer on network compatibility

Premium and Premium Plus equipment lines



KEYLESS-GO Comfort package



Panoramic electric glass sunroof[1]



Memory package



Burmester® surround sound system



MULTIBEAM LED Intelligent Light System

[1] Coupé only

Why not look over our equipment lines to enhance and personalise your choice of new car? If you want to increase your comfort and add the best in entertainment to the AMG Line, the Premium and Premium Plus equipment lines do just that.

Package comprises:	Notes	Coupé		Cabriolet	
		Premium **£2,795.00**[1] (code DP0)	**Premium Plus** **£3,895.00**[1] (code DP1)	**Premium** **£1,795.00**[1] (code DP0)	**Premium Plus** **£2,895.00**[1] (code DP1)
KEYLESS-GO Comfort package	Including hands-free access, automatic powered boot closing (Coupé only), keyless entry and keyless start	■	■	■	■
Memory package	Driver's seat, front passenger seat, steering column and exterior mirrors – electrically adjustable with memory; includes electro-pneumatic four-way lumbar support and seat cushion depth adjustment (6 cm)	■	■	■	■
Panoramic electric glass sunroof	Single-section glass module covering two thirds of the roof area, creating a continuous surface directly connected to the windscreen. Electric sunblind provides shade in strong sunlight. Rain closing function automatically closes the roof if it starts to rain	■	■	–	–
Burmester® surround sound system	13 speakers and a 9-channel amplifier with total output of 590 watts	–	■	–	■
MULTIBEAM LED Intelligent Light System	Headlamps with 84 individually-controlled LEDs, integrated daytime running lamps, Active Light System, cornering light function, motorway mode function, enhanced fog lamp function, Adaptive Highbeam Assist and locator lighting	–	■	–	■

[1]The recommended on-the-road price includes the Road Fund Licence applicable to the standard model plus delivery charge (£635.00 incl. VAT), new vehicle registration fee (£55.00) and number plates (£25.00 incl. VAT). VAT is calculated at the standard rate of 20%

Pricing summary for model and equipment lines

Model	Transmission	Recommended OTR price (£)[1]		
		AMG Line	AMG Line Premium	AMG Line Premium Plus
Coupé				
E 220 d	9G-TRONIC PLUS 9-speed automatic	40,180.00	42,975.00	44,075.00
E 220 d 4MATIC	9G-TRONIC PLUS 9-speed automatic	41,820.00	44,615.00	45,715.00
E 350 d 4MATIC	9G-TRONIC PLUS 9-speed automatic	51,415.00	54,210.00	55,310.00
E 300	9G-TRONIC PLUS 9-speed automatic	41,070.00	43,865.00	44,965.00
E 400 4MATIC	9G-TRONIC PLUS 9-speed automatic	50,820.00	53,615.00	54,715.00
Cabriolet				
E 220 d	9G-TRONIC PLUS 9-speed automatic	44,675.00	46,470.00	47,570.00
E 220 d 4MATIC	9G-TRONIC PLUS 9-speed automatic	46,315.00	48,110.00	49,210.00
E 350 d 4MATIC	9G-TRONIC PLUS 9-speed automatic	55,910.00	57,705.00	58,805.00
E 300	9G-TRONIC PLUS 9-speed automatic	45,565.00	47,360.00	48,460.00
E 400 4MATIC	9G-TRONIC PLUS 9-speed automatic	55,715.00	57,510.00	58,610.00

[1]The recommended on-the-road price includes the Road Fund Licence applicable to the standard model plus delivery charge (£635.00 incl. VAT), new vehicle registration fee (£55.00) and number plates (£25.00 incl. VAT). VAT is calculated at the standard rate of 20%

Standard equipment

Item **Transmission and Suspension**	E 220 d (4MATIC) AMG Line	E 350 d 4MATIC AMG Line	E 300 AMG Line	E 400 4MATIC AMG Line
AGILITY CONTROL suspension with selective damping system and lowering by 15 mm	●	–	●	–
AIR BODY CONTROL air suspension The multi-chamber air suspension reduces rolling movements, increases ride comfort and stability. In combination with DYNAMIC SELECT, three pre-set modes (Comfort, Sport and Sport+) are available to deliver a tailored driving experience	○	●	○	●
DYNAMIC SELECT with a choice of driving modes: ECO, Comfort, Sport, Sport+ and Individual	●	●	●	●
ECO start/stop function	●	●	●	●

Item **Exterior**	E 220 d (4MATIC) AMG Line	E 350 d 4MATIC AMG Line	E 300 AMG Line	E 400 4MATIC AMG Line
Mirror package – electrically folding mirrors and automatically-dimming exterior driver's mirror and rear-view mirror	●	●	●	●
8.5-litre AdBlue tank (Cabriolet only)	●	●	–	–
25-litre AdBlue tank (Coupé only)	●	●	–	–
66-litre fuel tank	●	●	●	●
Acoustic soft-top – with enhanced climate and noise comfort (Cabriolet only)	●	●	●	●
AIRCAP – wind deflector and draught-stop (Cabriolet only)	●	●	●	●
AIRSCARF – neck-level heating system (Cabriolet only)	●	●	●	●
AMG bodystyling - front and rear aprons, side skirts	●	●	●	●
AMG boot lid spoiler in body colour	●	●	●	●
Exterior mirrors – heated and electronically adjustable	●	●	●	●
Headlamps – LED High Performance including LED daytime running lamps	●	●	●	●
MAGIC VISION CONTROL – heated windscreen wiper system	●	●	●	●

● Standard ○ Optional – Not available

Item **Exterior (continued)**	E 220 d (4MATIC) AMG Line	E 350 d 4MATIC AMG Line	E 300 AMG Line	E 400 4MATIC AMG Line
Perforated front brake discs with 'Mercedes-Benz' lettering	●	●	●	●
Pre-installation for roof rail systems (Coupé only)	●	●	●	●
Radiator grille with integrated star – louvre in matt iridium silver with chrome trim	●	●	●	●
Rain-sensing windscreen wipers	●	●	●	●
Rear lights – LED	●	●	●	●
Reversing camera	●	●	●	●
Run-flat tyres	●	●	●	●
Fully-automatic boot separator (Cabriolet only)	●	●	●	●
Sports exhaust system	–	–	●	–
Top surround of side windows in polished aluminium	●	●	●	●
Visible twin-pipe exhaust system integrated into bumper	●	●	●	●
Waistline in polished aluminium	●	●	●	●

Item **Interior**	E 220 d (4MATIC) AMG Line	E 350 d 4MATIC AMG Line	E 300 AMG Line	E 400 4MATIC AMG Line
Seat Comfort package – driver and front passenger seat Electric adjustment of seat cushion inclination, height and backrest Electro-pneumatic four-way lumbar support Manual seat cushion depth (6 cm), fore/aft and headrest adjustment	●	●	●	●
Stowage package Bag hooks under parcel shelf, folding box and net on luggage compartment floor Double cup holder in centre console 2×750 ml, double cup holder between two rear seats, tensioning strap in stowage compartment in centre console, map pockets on rear of front seats Nets beneath rear seat cushions for storage of flat objects	●	●	●	●
Analogue clock on centre console	●	●	●	●
Automatic climate control – two-zone	●	●	●	●
Belt feeder – driver and front passenger seat belt automatically positioned within easier reach	●	●	●	●
Central stowage compartment with 12 V socket in centre console	●	●	●	●
Door pins in chrome	●	●	●	●
Electric windows (4) – with one-touch opening and closing, including obstruction sensors	●	●	●	●
Electronic key – chrome surround	●	●	●	●
Floor mats with 'AMG' lettering	●	●	●	●
Front centre armrest with stowage compartment	●	●	●	●

● Standard ○ Optional – Not available

Item Interior (continued)	E 220 d (4MATIC) AMG Line	E 350 d 4MATIC AMG Line	E 300 AMG Line	E 400 4MATIC AMG Line
Front door sill panels with 'Mercedes-Benz' lettering – illuminated	●	●	●	●
Glasses compartment in overhead control panel	●	●	●	●
Glove compartment – lockable, air-conditioned and illuminated	●	●	●	●
Head restraints for driver and front passenger (four-way adjustability) and in rear (two-way)	●	●	●	●
Instrument cluster with two tube-design round dials and 8.4-inch TFT multifunction display	●	●	●	●
Interior 64-colour ambient lighting – multicolour LED lighting of trim on dashboard, centre console and door panelling; and in door pockets, cup holder, stowage compartment and rear footwell	●	–	●	–
Interior 64-colour ambient lighting – dynamic multicolour LED lighting of trim on dashboard, centre console and door panelling; and in door pockets, cup holder, stowage compartment and rear footwell 10 colour palettes with various colour combinations Climate control effects with colour feedback Three unique ambient lighting settings based on display styles 'Classic', 'Progressive' or 'Sport' in conjunction with widescreen (12.3-inch) cockpit display Welcome light effect upon entry to cabin Only in conjunction with COMAND Online	○	●	○	●

Item	E 220 d (4MATIC) AMG Line	E 350 d 4MATIC AMG Line	E 300 AMG Line	E 400 4MATIC AMG Line
KEYLESS-GO starting function	●	●	●	●
Outside temperature display	●	●	●	●
Seats – front, heated	●	●	●	●
Seats – rear, split folding 40:20:40 (Coupé only)	●	●	●	●
Seats – rear, split folding 50:50 (Cabriolet only)	●	●	●	●
Service indicator ASSYST	●	●	●	●
Sports pedals in brushed stainless steel with black rubber studs	●	●	●	●
Sun visors with illuminated vanity mirrors	●	●	●	●
Trip computer in multifunction display showing current fuel consumption	●	●	●	●

● Standard ○ Optional – Not available

Item	E 220 d (4MATIC) AMG Line	E 350 d 4MATIC AMG Line	E 300 AMG Line	E 400 4MATIC AMG Line
Steering				
Direct-Steer speed sensitive steering	●	●	●	●
Steering column – manually adjustable for height and reach	●	●	●	●
Steering wheel – 3-spoke multifunction AMG steering wheel with touch control buttons, trimmed in black nappa leather with flattened bottom section	●	●	●	●
Steering wheel – with gearshift paddles	●	●	●	●
Steering wheel – touch control buttons for audio and onboard settings	●	●	●	●
Paint, Trim and Upholstery				
Paint – non metallic	●	●	●	●
Trim – centre console, black open-pore ash wood	●	●	●	●
Trim – dashboard, black open-pore ash wood	●	●	●	●
Trim – upper dashboard, ARTICO leather[1] with contrasting stitching	●	●	●	●
Upholstery – ARTICO leather[1]/DINAMICA microfibre	●	●	●	●

Item	E 220 d (4MATIC) AMG Line	E 350 d 4MATIC AMG Line	E 300 AMG Line	E 400 4MATIC AMG Line
Security and Safety				
Active bonnet – pedestrian safety measure which detects an impact and raises bonnet	●	●	●	●
Active Brake Assist	●	●	●	●
Active Parking Assist including front and rear parking sensors The system automatically steers the vehicle into parking spaces. Bay and parallel parking capable	●	●	●	●
Adaptive brake lights	●	●	●	●
Adaptive brake system with HOLD function and brake drying in the wet	●	●	●	●
Airbag – kneebag for driver	●	●	●	●
Airbags – driver and front passenger, with extended adaptivity for front passenger airbag	●	●	●	●
Airbags – headbags	●	●	●	●
Airbags – sidebag for driver and front passenger (combined thorax/pelvis bag)	●	●	●	●
Airbags – windowbags	●	●	●	●
Alarm system with immobiliser and interior protection	●	●	●	●

● Standard ○ Optional – Not available [1]Man-made leather

Item Security and Safety (continued)	E 220 d (4MATIC) AMG Line	E 350 d 4MATIC AMG Line	E 300 AMG Line	E 400 4MATIC AMG Line
Anti-lock braking system (ABS)	●	●	●	●
ATTENTION ASSIST – can help alert to long journey fatigue	●	●	●	●
Automatic child seat recognition sensor	●	●	●	●
Brake wear warning display	●	●	●	●
Central locking with interior switch, automatic locking and crash sensor with emergency opening function	●	●	●	●
Cruise control with variable speed limiter	●	●	●	●
Diesel Particulate Filter (DPF)	●	●	–	–
Electric parking brake	●	●	●	●
Electronic Stability Programme (ESP®)	●	●	●	●
First-aid kit and warning triangle	●	●	●	●

Item	E 220 d (4MATIC) AMG Line	E 350 d 4MATIC AMG Line	E 300 AMG Line	E 400 4MATIC AMG Line
Incorrect fuelling protection	●	●	–	–
ISOFIX child seat attachment points – rear seats	●	●	●	●
PRE-SAFE® anticipatory safety system	●	●	●	●
Remote boot release	●	●	●	●
Seat belts – three-point	●	●	●	●
Seat occupancy sensor for front passenger seat	●	●	●	●
Status display for rear seat belts in instrument cluster	●	●	●	●
Tyre pressure monitoring system	●	●	●	●

● Standard ○ Optional – Not available

Item **Communications and In-Car Entertainment**	E 220 d (4MATIC) AMG Line	E 350 d 4MATIC AMG Line	E 300 AMG Line	E 400 4MATIC AMG Line
Audio 20 USB, including touchpad and control wheel with integrated Media Interface for iPod® or iPhone® and Bluetooth® interface with hands-free function	●	●	●	●
DAB digital radio	●	●	●	●
COMAND Online system[1] with Media Interface and touchpad In replacement to SD card-based navigation system: fast hard disk navigation with instructions shown on 12.3-inch high-resolution colour display and in the instrument cluster. Includes 3D views with visualisation of roads and buildings as well as junctions and lane assistants, making it easy for drivers to orientate themselves. Spoken instructions are emitted through vehicle's built-in speakers. WLAN/WiFi hotspot for connecting up to three mobile devices. Car-to-X Communication exchanging the latest traffic information between appropriately-equipped vehicles, warns of broken down vehicles and other hazards on the route. Concierge service, smartphone integration via Android Auto or Apple CarPlay™. Voice-operated control system LINGUATRONIC. Please refer to page 30 for more information	○	●	○	●
Mercedes me connect (standard services) Including emergency call system (eCall), accident recovery, breakdown and maintenance management	●	●	●	●

Item	E 220 d (4MATIC) AMG Line	E 350 d 4MATIC AMG Line	E 300 AMG Line	E 400 4MATIC AMG Line
Mercedes me connect (Remote Online) Onboard use of remote door locking and unlocking, remote interrogation of vehicle status. Remote Online subscription services are limited to three years from initial registration, and can be extended at additional cost. Only available with SD card-based navigation system	○	–	○	–
High-resolution 8.4-inch multimedia colour display with SD card-based navigation	●	–	●	–
High-resolution 12.3-inch multimedia colour display with COMAND Online system	○	●	○	●
SD card-based navigation system Operation via controller, touchpad or voice control. SD card navigation with instructions shown on 8.4-inch high-resolution colour display and in the instrument cluster. Includes 3D views with visualisation of roads and buildings as well as junction and lane assistants, making it easy for drivers to orient themselves. Spoken instructions are emitted through vehicle's built-in speakers. Software and map can be updated online	●	–	●	–
USB ports (2) in centre console	●	●	●	●

● Standard ○ Optional – Not available [1]COMAND Online functionality and Wi-Fi connectivity is dependent on a compatible cellular data connection. Please check with your local Mercedes-Benz Retailer on network compatibility

A revolution in style

Item	Notes			E 220 d (4MATIC) AMG Line	E 350 d 4MATIC AMG Line	E 300 AMG Line	E 400 4MATIC AMG Line	Basic RRP excl. VAT (£)	Total RRP incl. VAT (£)
Wheels									
19" alloy wheels (4) – 5-twin-spoke design, painted titanium grey with high-sheen finish front: 245/40 tyres rear: 275/35 tyres			RTD	●	●	●	●	–	–
19" alloy wheels (4) – 5-twin-spoke design, painted high-gloss black with high-sheen finish front: 245/40 tyres rear: 275/35 tyres	Only in conjunction with Night package (code P55)		RTE	△	△	△	△	–	–
20" alloy wheels (4) – multi-spoke design, painted titanium grey with high-sheen finish front: 245/35 tyres rear: 275/30 tyres			RVQ	○	○	○	○	495.83	**595.00**

● Standard ○ Optional – Not available △ Available only in conjunction with, or as part of, an option package

Item	Notes			E 220 d (4MATIC) AMG Line	E 350 d 4MATIC AMG Line	E 300 AMG Line	E 400 4MATIC AMG Line	Basic RRP excl. VAT (£)	Total RRP incl. VAT (£)
Wheels									
20" alloy wheels (4) – multi-spoke design, painted high-gloss black with high-sheen finish front: 245/35 tyres rear: 275/30 tyres	Only in conjunction with Night package (code P55)		RVR	△	△	△	△	495.83	**595.00**

● Standard ○ Optional – Not available △ Available only in conjunction with, or as part of, an option package

Lane Tracking package

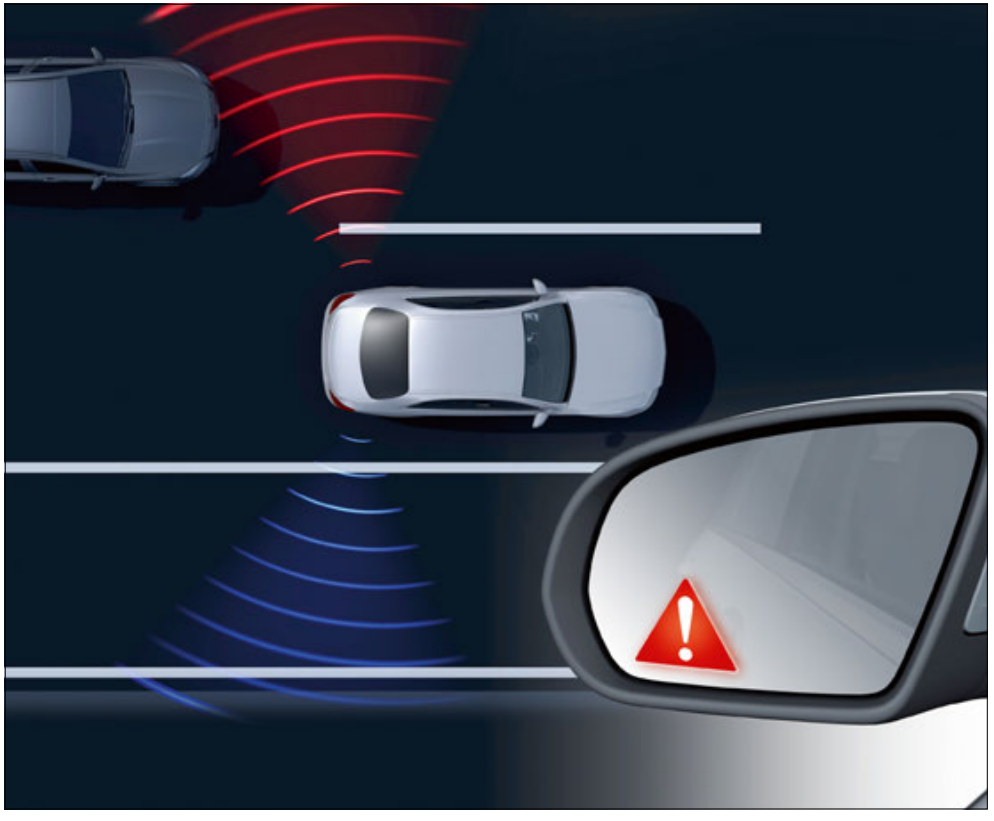

The Lane Tracking package: Active Lane Keeping Assist and Blind Spot Assist

The Lane Tracking package includes Blind Spot Assist and Active Lane Keeping Assist – highly intelligent features to help you stay safe on the road by making the drive more effortless, and to alert you to any emergency.

Lane Tracking package – designed and priced as a package, including features listed below.

Total incl. VAT £595.00

Lane Tracking package (code 22P)
Blind Spot Assist – visible warning in exterior mirrors if a vehicle is detected in blind spot, audible warning if indicating to move out of lane
Active Lane Keeping Assist – can warn a driver who is unintentionally drifting out of lane and help to return the vehicle to its lane by one-sided braking intervention

Driving Assistance package

The Driving Assistance package contains a range of highly intelligent features to help you stay safe on the road – by making the drive more effortless, by warning of danger, and by taking steps to protect you in an emergency.

Driving Assistance package – designed and priced as a package, including items as listed. **Total incl. VAT £1,695.00**

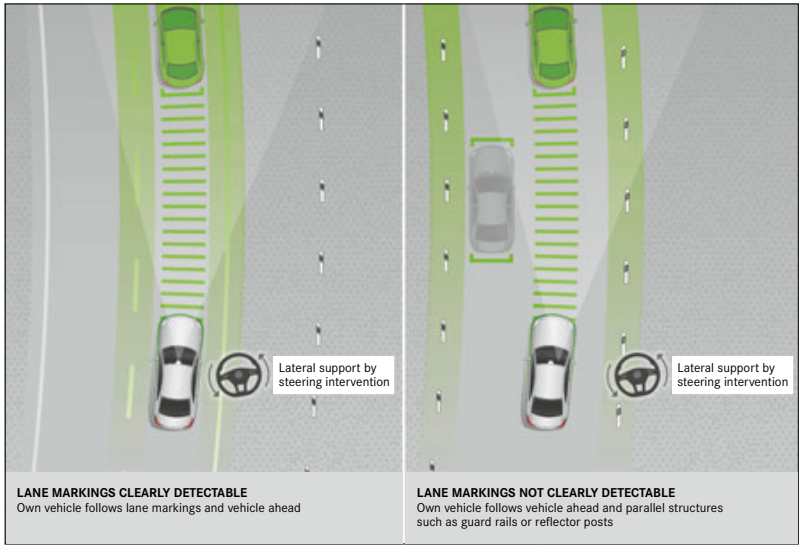

Active Distance Assist DISTRONIC – Active Speed Limit Assist – Evasive Steering Assist

[1] Only in conjunction with COMAND Online system

Driving Assistance package (code 23P)
Active Blind Spot Assist Active Blind Spot Assist can warn the driver of vehicles in the blind spot during a lane change and can help to avoid a collision by means of one-sided braking intervention
Active Brake Assist Active Brake Assist with cross-traffic function and tailback emergency braking function can help to avoid accidents with vehicles ahead, crossing traffic and also pedestrians, and/or mitigate their consequences
Active Distance Assist DISTRONIC – Active Speed Limit Assist[1] DISTRONIC proximity control helps maintain the desired distance from another vehicle in front. Active Speed Limit Assist[1] ensures detected speed limits are automatically adopted as the set speed for Active Distance Assist DISTRONIC
Active Lane Keeping Assist Active Lane Keeping Assist can warn drivers when they unintentionally leave their lane and can use one-sided braking intervention to help manoeuvre the vehicle back into its lane (including in the case of broken lane markings if there is a risk of collision)
Evasive Steering Assist Evasive Steering Assist can support the driver in making evasive manoeuvres if, in a dangerous situation, he/she moves to avoid any pedestrian detected by the system
PRE-SAFE® PLUS When a rear-end collision threatens, PRE-SAFE® PLUS can initiate preventive measures to protect the occupants, including warning following traffic and locking the brakes on standstill

COMAND Online system





COMAND Online system[1] with Media Interface and touchpad – designed and priced as a package, including items as listed below.

E 220 d, E 220 d 4MATIC and E 300 **Total incl. VAT £1,495.00**

Standard on E 350 d 4MATIC and E 400 4MATIC

COMAND Online system (code 531)
Media Interface and touchpad with control wheel and 12.3-inch colour display. Integrated WLAN hotspot for onboard access of WLAN-enabled devices
Navigation Hard disk drive (HDD) navigation with 3D map display, Live Traffic Information and European map data online updates free of charge (first three years), Speed Limit Assist and LINGUATRONIC voice control
Connectivity Smartphone integration via Android Auto or Apple CarPlay™, Media Interface, USB and Bluetooth® interface for hands-free telephony. Connection and control of portable media devices (e.g. MP3 player, USB storage media)
Mercedes me connect Integration of online content (e.g. fuel prices) in navigation map, Car-to-X communication and Concierge Service providing personal support by telephone in the search for interesting locations (POI), restaurants or hotels (free of charge for one year). For availability please check with your Retailer

Widescreen (12.3-inch) cockpit display

Creates one floating screen combined with 12.3-inch COMAND display allowing clearer display of assistance systems and features ambient lighting surrounding both screens. Customisable display options with three display styles: ‘Classic’, ‘Sport’ and ‘Progressive’.

Optional in conjunction with COMAND Online **Total incl. VAT £495.00**

[1]COMAND Online functionality and Wi-Fi connectivity is dependent on a compatible cellular data connection. Please check with your local Mercedes-Benz Retailer on network compatibility

Night package





How to lend dramatic effect to your E-Class? Simply add the Night package. With either 19" 5-twin-spoke or optional 20" multi-spoke alloy wheels painted high-gloss black and further design elements in high-gloss black, the Night package adds a distinct character to the exterior.

Night package – designed and priced as a package, including items as listed below. **Total incl. VAT £595.00**

Night package (code P55)
19" alloy wheels (4) – 5-twin-spoke design, painted high-gloss black with high sheen finish (code RTE)[1]
Optional 20" alloy wheels (4) – multi-spoke design, painted high-gloss black with high sheen finish (code RVR)[1]
Diamond radiator grille with integral Mercedes-Benz star and a single louvre in high-gloss black
Exterior mirror housings in high-gloss black
Front apron in high-gloss black
Privacy glass for rear side windows and rear windscreen (Coupé only)
Rear bumper in high-gloss black with chrome trim
Waistline trim strip in high-gloss black (Coupé only)

[1] Please refer to Wheels section for pricing and availability

Optional equipment

Item	Notes		E 220 d (4MATIC) AMG Line	E 350 d 4MATIC AMG Line	E 300 AMG Line	E 400 4MATIC AMG Line	Basic RRP excl. VAT (£)	Total RRP incl. VAT (£)
Suspension and Handling								
AIR BODY CONTROL air suspension The multi-chamber air suspension reduces rolling movements, increases ride comfort and stability. In combination with DYNAMIC SELECT, three pre-set modes (Comfort, Sport and Sport+) are available to deliver a tailored driving experience	Ground clearance can be increased at the push of a button at speeds below 50 mph (+25 mm on E 220 d and E 300, +35 mm on E 350 d 4MATIC and E 400 4MATIC). Suspension is automatically lowered by 15 mm at speeds above 75 mph to reduce aerodynamic drag and improve handling stability	489	○	●	○	●	1,245.83	**1,495.00**
Exterior								
Night package Alloy wheels painted high-gloss black with a high-sheen finish Diamond radiator grille with integral Mercedes-Benz star and louvre in high-gloss black Exterior mirror housings in high-gloss black Front apron in high-gloss black Privacy glass for rear side windows and rear windscreen (Coupé only) Rear bumper in high-gloss black with chrome trim Waistline trim strip in high-gloss black (Coupé only)	Please refer to page 31 for more information	P55	○	○	○	○	495.83	**595.00**
360° camera Four networked cameras in front grille, wing mirror and boot. Information from Active Parking Assist on vehicle contours shown, and rear guidelines included	Not in conjunction with Premium or Premium Plus equipment lines	P47	○	○	○	○	279.17	**335.00**
360° camera with Remote Parking Assist In addition to 360° camera: Remote Park Assist 3-year subscription. Extension possible and pricing information available via Mercedes me store	Only in conjunction with Premium or Premium Plus equipment lines. Coupé only	PBH	○	○	○	○	329.17	**395.00**
Privacy glass Includes rear side windows and rear windscreen	Included with Night package (code P55). Coupé only	840	○	○	○	○	287.50	**345.00**

● Standard ○ Optional – Not available

Item	Notes		E 220 d (4MATIC) AMG Line	E 350 d 4MATIC AMG Line	E 300 AMG Line	E 400 4MATIC AMG Line	Basic RRP excl. VAT (£)	Total RRP incl. VAT (£)
Paint, Trim and Upholstery								
Metallic paint		–	○	○	○	○	570.83	**685.00**
designo metallic paint Available in: designo diamond white 799 designo hyacinth red 996	Please check with your Retailer for availability	–	○	○	○	○	745.83	**895.00**
Trim – dashboard and door, aluminium with crystal cut	Centre console black open-pore ash wood	H40	○	○	○	○		**no-cost option**
Trim – dashboard and door, designo magnolia wood, brown flowing lines	Centre console high-gloss black	H26	○	○	○	○	537.50	**645.00**
Trim – dashboard and door, designo piano lacquer, black flowing lines	Centre console high-gloss black	H16	○	○	○	○	537.50	**645.00**
Trim – dashboard and door, high-gloss brown ash wood	Centre console high-gloss black	H06	○	○	○	○		**no-cost option**
Trim – dashboard and door, light brown open-pore elm wood	Centre console light brown open-pore elm wood	H05	○	○	○	○		**no-cost option**
Trim – dashboard and door, light brown sen wood	Centre console high-gloss black	H01	○	○	○	○		**no-cost option**
Trim – dashboard and door, metal weave	Centre console high-gloss black	H64	○	○	○	○	304.17	**365.00**
Upholstery – leather		–	○	○	○	○	912.50	**1,095.00**
Upholstery – nappa leather		–	○	○	○	○	1,329.17	**1,595.00**

● Standard ○ Optional – Not available

Item	Notes		E 220 d (4MATIC) AMG Line	E 350 d 4MATIC AMG Line	E 300 AMG Line	E 400 4MATIC AMG Line	Basic RRP excl. VAT (£)	Total RRP incl. VAT (£)
Comfort								
AIR-BALANCE package Interior fragrance dispenser. Fragrance can be changed by exchanging the flasks in the glove compartment. Intensity and duration of fragrance diffusion can be adjusted. Oxygen ionisation and improved filtering system	Contact your Retailer for information about available fragrances	P21	○	○	○	○	245.83	**295.00**
Warmth Comfort package – front and rear Fast-reacting seat heating for driver and front passenger Heated armrests in centre console Heated armrests in driver and front passenger doors Seat heating for rear passengers	Coupé only. Only in conjunction with leather or nappa leather, COMAND Online (code 531) and Premium equipment line (code DP0) or Premium Plus equipment line (code DP1)	P69	○	○	○	○	662.50	**795.00**
Closing aid for doors Power closing ensures smooth and virtually silent closing. Once they have initially engaged, doors are automatically drawn closed by servo motors		883	○	○	○	○	362.50	**435.00**
THERMOTRONIC – luxury automatic climate control, rear Automatic climate control system with three climate zones and three climate modes. The driver and front passenger are able to regulate temperature and air distribution independently. Temperature and airflow for the rear can be adjusted separately		581	○	○	○	○	625.00	**750.00**

Item	Notes		E 220 d (4MATIC) AMG Line	E 350 d 4MATIC AMG Line	E 300 AMG Line	E 400 4MATIC AMG Line	Basic RRP excl. VAT (£)	Total RRP incl. VAT (£)
Safety and Assistance Systems								
Driving Assistance package Includes Active Blind Spot Assist, Active Brake Assist, Active Lane Keeping Assist, Active Distance Assist DISTRONIC – Active Speed Limit Assist, Evasive Steering Assist and PRE-SAFE® PLUS	Not in conjunction with Lane Tracking package (code 22P). Please refer to page 29 for more information	23P	○	○	○	○	1,412.50	**1,695.00**
Lane Tracking package Includes Active Lane Keeping Assist and Blind Spot Assist	Not in conjunction with Driving Assistance package (code 23P). Please refer to page 28 for more information	22P	○	○	○	○	495.83	**595.00**
Communications and In-Car Entertainment								
Widescreen (12.3-inch) cockpit display	Only available with COMAND Online system (code 531). Please refer to page 30 for more information	464	○	○	○	○	412.50	**495.00**
Burmester® surround sound system 13 speakers and a 9-channel amplifier with total output of 590 W (7 × 50 W and 2 × 120 W)	Available as part of Premium Plus equipment line (code DP1)	810	○	○	○	○	625.00	**750.00**
COMAND Online system[1] with Media Interface and touchpad	Please refer to page 30 for more information	531	○	●	○	●	1,245.83	**1,495.00**
Head-up display Virtual colour image (21 × 7 cm) in front of the driver, offering information on navigation, speed, speed limits, cruise control and DISTRONIC settings	Only available with COMAND Online system (code 531)	463	○	○	○	○	687.50	**825.00**
Mercedes me connect (Remote Online) Geofencing Parked vehicle locator Remote door locking/unlocking Remote retrieval of vehicle status Vehicle tracker	Remote Online subscription services are limited to three years from initial registration, and can be extended at additional cost. Not available with COMAND Online system (code 531)	11U	○	○	○	–	125.00	**150.00**

● Standard ○ Optional – Not available [1]COMAND Online functionality and Wi-Fi connectivity is dependent on a compatible cellular data connection. Please check with your local Mercedes-Benz Retailer on network compatibility

Item	Notes		E 220 d (4MATIC) AMG Line	E 350 d 4MATIC AMG Line	E 300 AMG Line	E 400 4MATIC AMG Line	Basic RRP excl. VAT (£)	Total RRP incl. VAT (£)
Communications and In-Car Entertainment (continued)								
Wireless charging Wireless charging surface integrated into quick stowage tray in front of centre console. Quick establishment of connection between multimedia system and mobile phone via Near Field Communication (NFC)	Only in conjunction with COMAND Online (code 531). Wireless charging is suitable for smartphones with a diagonal screen size up to 6 inches. Please refer to http://www.mercedes-benz-mobile.com/ for full device compatibility	897	○	○	○	○	125.00	**150.00**
Service Package								
Service Care Service Care allows you to spread the cost of servicing your new car in the Mercedes-Benz Retailer network. Taking out a Service Care plan ensures your servicing needs are taken care of by fully-trained Mercedes-Benz Technicians with the added benefit of a Mercedes-Benz service history	Price is based on a monthly rate. Example given is for two services taken over 24 months. Further payment options are available. New Service Care prices apply only to vehicles up to 12 months old prior to first service	1	○	○	○	○	30.83	**37.00**
	Price is based on a monthly rate. Example given is for three services taken over 36 months. Further payment options are available. New Service Care prices apply only to vehicles up to 12 months old prior to first service		○	○	○	○	34.17	**41.00**

Mercedes me applications and services[1]

Features available via Mercedes me store: https://mercedes-benz.com/en/mercedes-me/

Item	Notes	Notes on pricing and availability
Concierge Services Available through me connect, providing personal support by telephone in the search for interesting locations (POI), restaurants or hotels	Only available with COMAND Online system (code 531)	**Free of charge for first year** Extension possible and pricing information available via Mercedes me store
In-Car Internet Ability for an in-car internet service and personalised radio. Use the whole world of the internet in your vehicle by using COMAND Online as a Wi-Fi hotspot allowing unlimited access to internet radio. All you need is a Vodafone account with the corresponding data volume	Only available with COMAND Online system (code 531)	**Available via Mercedes me store** Please refer to Mercedes me store for pricing information
Live Traffic Using this service allows the reception of up-to-date and precise traffic information for optimised dynamic route guidance and a more accurate estimated time of arrival		**Free of charge for first three years** Requires acceptance of Terms and Conditions on Mercedes me connect after first three months. Extension possible and pricing information available via Mercedes me store
Mercedes me connect (Remote Online) Geofencing Parked vehicle locator Remote door locking/unlocking Remote retrieval of vehicle status Vehicle tracker	Not available with COMAND Online system (code 531)	**Available via Mercedes me store** Remote Online subscription services are limited to three years from initial registration, and can be extended at additional cost

[1]Extra services available via the Mercedes me account on new E-Class. Terms and Conditions must be agreed to in the Mercedes me portal before activation

Item	Notes	Notes on pricing and availability
Remote Parking Assist Allows user to park vehicle via a compatible Apple device	Only available with 360° camera (code PBH) and Premium or Premium Plus equipment line (code DP0 and DP1). Coupé only	**Available via Mercedes me store** Please refer to Mercedes me store for pricing information
Vehicle Settings Personal profile of your favourite settings Remote door locking and unlocking Remote retrieval of vehicle status Send to car function	Only available with COMAND Online system (code 531)	**Free of charge for first three years** Extension possible and pricing information available via Mercedes me store
Vehicle Monitoring Geofencing Parked vehicle locator Vehicle tracker	Only available with COMAND Online system (code 531)	**Available via Mercedes me store** Please refer to Mercedes me store for pricing information

Genuine Accessories

We've developed a range of Accessories you can add to help personalise and enhance your E-Class. Your local Mercedes-Benz Retailer can advise on fitting costs of Accessories, where applicable. Further information on our full range of Genuine Accessories can be found on the Mercedes-Benz UK website.

01 | Valve caps

Set of 4 decorative chrome caps for valves. Star logo embossed on front, under transparent plastic. Also suitable for tyre pressure monitoring valves.

RRP £15.12 (incl. VAT)

01



02 | Door handle recess

Chrome-design door handle recesses lend the vehicle a polished, individual look. The stable, robust material is precision-tailored to the bodywork and protects the paintwork in the recess from scratches. Set of 2.

RRP £40.68 (incl. VAT), excluding fitting

02



03 | Concertina load sill protector

Protects the rear of the vehicle from scratches when you're loading up – and prevents dirt from the vehicle from getting onto your clothes. Practical design – can be secured to shallow boot tub or reversible mat.

RRP £41.53 (incl. VAT)



04 | Rear trim strip

High-sheen chromed rear trim strip. Coordinates with all of your vehicle's chrome trim parts.

RRP £174.00 (incl. VAT), excluding fitting





05 | Luggage net

The luggage net is designed to secure small items and lightweight objects in place, preventing damage during transport.

RRP £51.72 (incl. VAT)



06 | USB power charger

Intelligent ‘smart charging’ and an output of up to 2 × 2.4 A allow you to power up quickly and conveniently via the cigarette lighter while you’re on the move. With protection against overheating and subtly illuminated USB ports that make the charger easy to use in the dark, too.

RRP £25.00 (incl. VAT)

Colours and materials

Non-metallic paints

Standard

149 polar white

No-cost option



040 black

Metallic paints

Additional-cost option



197 obsidian black



890 cavansite blue



296 aragonite silver



989 emerald green



660 rubellite red



992 selenite grey



775 iridium silver

designo metallic paints

Additional-cost option

799 diamond white



996 hyacinth red

Please note that, owing to limitations of on-screen representation, paint colours may differ from those shown

Upholstery

ARTICO/DINAMICA[1] (standard)



601A black

Leather (optional)



204A saddle brown/black



211A black



297A red/black

Nappa leather (optional)



811A black



895A deep white/black



897A red/black

Trim

Standard



736 black open-pore ash wood

No-cost options



H01 light brown sen wood



H05 light brown open-pore elm wood



H06 high-gloss brown ash wood



H40 aluminium with crystal cut

Additional-cost options



H64 metal weave

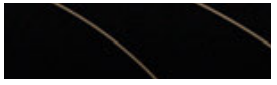

H16 designo piano lacquer, black flowing lines

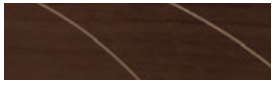

H26 designo magnolia wood, brown flowing lines

Canopies[2]

Cabriolet only



740 black



741 dark brown



744 dark blue



746 dark red

[1]ARTICO man-made leather/DINAMICA microfibre [2]Please refer to page 46 for possible combinations

Trim and upholstery combinations

	AMG Line				
	ARTICO/DINAMICA[1] (standard)	Leather/nappa leather (optional)			
	black (601A)	saddle brown/black leather (204A)	black leather/nappa leather (211A/811A)	red/black leather/nappa leather (297A/897A)	deep white/black nappa leather (895A)
Dashboard					
Steering wheel	black	black	black	black	black
Upper dashboard trim	black	black	black	black	black
Lower dashboard trim	black	saddle brown	black	black	black
Seats					
Seat cushion centre section	black	saddle brown	black	red	white
Side bolster trim	black	saddle brown	black	black	black
Head restraint	black	saddle brown	black	black	black
Seat belt	black	black	black	black	black
Doors					
Door trim at beltline	black	black	black	black	black
Door centre panel	black	saddle brown	black	red	white
Lower door trim	black	black	black	black	black
Roof lining	black	black	black	black	black
Parcel shelf	black	black	black	black	black
Floor covering					
Front and rear	black	black	black	black	black
Boot	black	black	black	black	black

[1] ARTICO man-made leather/DINAMICA microfibre

Combination options – upholstery

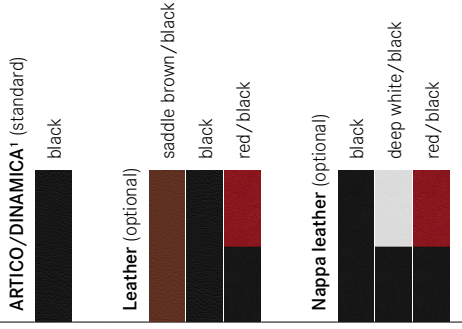

Non-metallic paints (standard)									
	040 black	●	●	●	●	●	●	●	
	149 polar white	●	●	●	●	●	●	●	
Metallic paints (optional)									
	197 obsidian black	●	●	●	●	●	●	●	
	296 aragonite silver	●	○	●	△	●	△	△	
	660 rubellite red	●	△	●	△	●	●	●	
	775 iridium silver	●	●	●	●	●	●	●	
	890 cavansite blue	○	●	●	△	●	○	△	
	989 emerald green	●	●	●	△	●	△	△	
	992 selenite grey	●	●	●	●	●	●	●	
designo metallic paints (optional)									
	799 diamond white	●	●	●	●	●	●	●	
	996 hyacinth red	●	△	●	●	●	●	●	

● Recommended ○ Possible △ Not recommended ¹ARTICO man-made leather/DINAMICA microfibre Please note that, owing to limitations of on-screen representation, paint colours may differ from those shown

Combination options – canopy

		black 601A/211A/811A				saddle brown/black 204A				red/black 297A/897A				deep white/black 895A			
	Canopies	740 black	741 dark brown	744 dark blue	746 dark red	740 black	741 dark brown	744 dark blue	746 dark red	740 black	741 dark brown	744 dark blue	746 dark red	740 black	741 dark brown	744 dark blue	746 dark red
Non-metallic paints (standard)																	
	040 black	●	○	–	○	●	–	–	–	●	–	–	–	●	–	–	–
	149 polar white	●	○	–	○	●	–	–	–	●	–	–	–	●	–	–	–
Metallic paints (optional)																	
	197 obsidian black	●	●	–	○	●	–	–	–	●	–	–	–	●	–	–	–
	296 aragonite silver	●	●	–	●	●	–	–	–	–	–	–	–	●	–	–	●
	660 rubellite red	●	–	–	●	–	–	–	–	–	–	–	–	●	–	–	●
	775 iridium silver	●	–	–	●	●	–	–	–	●	–	–	–	●	–	–	–
	890 cavansite blue	●	–	–	–	●	–	●	–	–	–	–	–	●	–	–	–
	989 emerald green	●	–	–	–	●	–	–	–	–	–	–	–	●	–	–	–
	992 selenite grey	●	–	–	●	●	–	–	–	●	–	–	–	●	–	–	–
designo metallic paints (optional)																	
	799 diamond white	●	–	–	○	●	–	–	–	●	–	–	–	●	–	–	–
	996 hyacinth red	●	–	–	–	–	–	–	–	–	–	–	–	●	–	–	–

● Recommended ○ Possible – Not recommended Please note that, owing to limitations of on-screen representation, paint colours may differ from those shown

Technical data – Coupé

	Diesel engine			Petrol engines	
Model	E 220 d	E 220 d 4MATIC	E 350 d 4MATIC	E 300	E 400 4MATIC
Engine					
Total displacement cc	1,950	1,950	2,987	1,991	2,996
Arrangement/cylinders/valves	in-line/4/16	in-line/4/16	V/6/24	in-line/4/16	V/6/24
Fuel delivery	Common-rail diesel with turbocharger	Common-rail diesel with turbocharger	Common-rail diesel with turbocharger	Electronically controlled direct injection with turbocharger	Electronically controlled direct injection with twin turbochargers
Power[1] hp (kW) at rpm	194 (143)/3,800	194 (143)/3,800	258 (190)/3,400	245 (180)/5,500	333 (245)/5,250-6,000
Torque[1] Nm at rpm	400/1,600–2,800	400/1,600–2,800	620/1,600–2,400	370/1,400–4,000	480/1,600–4,000
Compression ratio	15.5:1	15.5:1	15.5:1	9.8:1	10.5:1
Transmission					
9G-TRONIC PLUS 9-speed automatic	●	●	●	●	●
Tyre sizes					
Front	245/40 R 19	245/40 R 19	245/40 R 19	245/40 R 19	245/40 R 19
Rear	275/35 R 19	275/35 R 19	275/35 R 19	275/35 R 19	275/35 R 19

● Standard ○ Optional – Not available

		Diesel engine			Petrol engines	
Model		E 220 d	E 220 d 4MATIC	E 350 d 4MATIC	E 300	E 400 4MATIC
Performance		auto.	auto.	auto.	auto.	auto.
Acceleration 0–62 mph	sec	7.4	7.6	6.0	6.4	5.3
Top speed	mph	150	149	155[2]	155[2]	155[2]
Weights and capacities		auto.	auto.	auto.	auto.	auto.
Kerb weight[3]	kg	1,735	1,805	1,890	1,685	1,845
Perm. GVW	kg	2,300	2,370	2,425	2,230	2,360
Load capacity	l	425	425	425	425	425
Towing capacity – unbraked braked	kg	750 1,800	750 1,800	750 1,800	750 1,800	750 1,800
Fuel tank capacity/reserve	l	66/7	66/7	66/7	66/7	66/7
Turning circle	m	11.37	11.61	11.61	11.37	11.61
Fuel consumption[4,5]	mpg	auto.	auto.	auto.	auto.	auto.
Urban		55.4	48.7	35.3	31.7	25.2
Extra-urban[6]		67.3	56.5	50.4	47.9	42.2
Combined		61.4	53.3	42.8	40.4	33.6

	Diesel engine			Petrol engines	
Model	E 220 d	E 220 d 4MATIC	E 350 d 4MATIC	E 300	E 400 4MATIC
CO_2 emissions[5] g/km	auto.	auto.	auto.	auto.	auto.
Emissions standard	EU6	EU6	EU6	EU6	EU6
19" alloy wheels (275/35 tyres)	119	137	174	160	189
20" alloy wheels (275/30 tyres)	119	137	174	160	189
Insurance					
Group rating – AMG Line	35E	36E	42E	37E	41E
Incl. Premium/Premium Plus equipment lines	36E	37E	42E	38E	41E
Insurance ratings may vary depending on model line and specification. Please refer to http://www.thatcham.org/abigrouprating/ for further details					

[1]Figures according to Directive 80/1269/EEC in the currently applicable version [2]Electronically limited
[3]Figures according to Directive 92/21/EC, version 95/48/EC (kerb weight with fuel tank 90% full, driver, 68 kg, and luggage, 7 kg) for standard-specification vehicles. Optional extras and accessories will generally increase this figure and reduce the payload capacity accordingly
[4]All figures are based on a standard specification with the smallest tyre size [5]The choice of wheels and transmission may affect CO_2 emissions and corresponding Road Fund Licence
[6]EUDC: extra-urban driving cycle. Testing procedures adhere to EU Directive 93/116

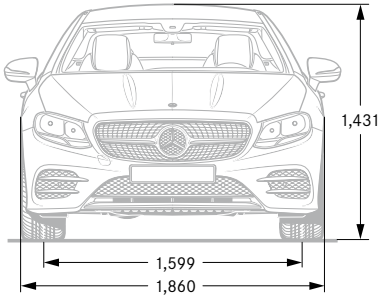

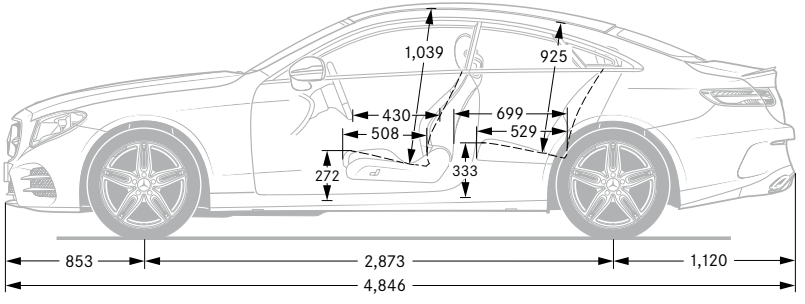

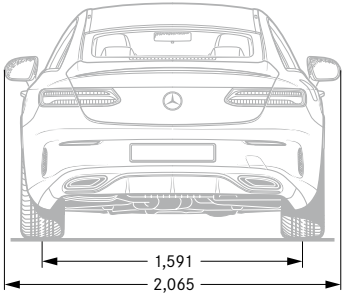

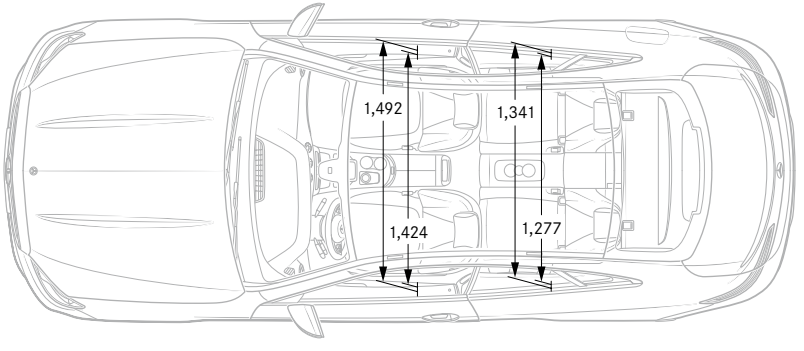

The figures on pages 47–50 are correct at time of publication. Please refer to the government website for latest data – http://carfueldata.direct.gov.uk/
All measurements in millimetres. The dimensions shown are mean values and apply to standard-specification, unladen vehicles

Technical data – Cabriolet

	Diesel engine			Petrol engines	
Model	E 220 d	E 220 d 4MATIC	E 350 d 4MATIC	E 300	E 400 4MATIC
Engine					
Total displacement cc	1,950	1,950	2,987	1,991	2,996
Arrangement/cylinders/valves	in-line/4/16	in-line/4/16	V/6/24	in-line/4/16	V/6/24
Fuel delivery	Common-rail diesel with turbocharger	Common-rail diesel with turbocharger	Common-rail diesel with turbocharger	Electronically controlled direct injection with turbocharger	Electronically controlled direct injection with twin turbochargers
Power[1] hp (kW) at rpm	194 (143)/3,800	194 (143)/3,800	258 (190)/3,400	245 (180)/5,500	333 (245)/5,250-6,000
Torque[1] Nm at rpm	400/1,600–2,800	400/1,600–2,800	620/1,600–2,400	370/1,300–4,000	480/1,600–4,000
Compression ratio	15.5:1	15.5:1	15.5:1	9.8:1	10.5:1
Transmission					
9G-TRONIC PLUS 9-speed automatic	●	●	●	●	●
Tyre sizes					
Front	245/40 R 19	245/40 R 19	245/40 R 19	245/40 R 19	245/40 R 19
Rear	275/35 R 19	275/35 R 19	275/35 R 19	275/35 R 19	275/35 R 19

● Standard ○ Optional – Not available

		Diesel engine			Petrol engines	
Model		E 220 d	E 220 d 4MATIC	E 350 d 4MATIC	E 300	E 400 4MATIC
Performance		auto.			auto.	auto.
Acceleration 0–62 mph	sec	7.7	7.9	6.1	6.6	5.5
Top speed	mph	147	149	155[2]	155[2]	155[2]
Weights and capacities		auto.		auto.	auto.	auto.
Kerb weight[3]	kg	1,830	1,900	1,975	1,780	1,935
Perm. GVW	kg	2,335	2,405	2,455	2,275	2,415
Load capacity	l	310–385	425	310–385	310–385	310–385
Towing capacity – unbraked braked	kg	750 1,800	750 1,800	750 1,800	750 1,800	750 1,800
Fuel tank capacity/reserve	l	66/7	66/7	66/7	66/7	66/7
Turning circle	m	11.37	11.61	11.61	11.37	11.61
Fuel consumption[4,5]	mpg	auto.	auto.	auto.	auto.	auto.
Urban		55.4	45.6	33.2	30.7	24.8
Extra-urban[6]		60.1	53.3	46.3	45.6	40.9
Combined		57.7	49.6	41.5	39.2	32.8

	Diesel engine			Petrol engines	
Model	E 220 d	E 220 d 4MATIC	E 350 d 4MATIC	E 300	E 400 4MATIC
CO_2 emissions[5] g/km	auto.	auto.	auto.	auto.	auto.
Emissions standard	EU6	EU6	EU6	EU6	EU6
19" alloy wheels (275/35 tyres)	126	146	179	167	194
20" alloy wheels (275/30 tyres)	126	146	179	167	194
Insurance					
Group rating – AMG Line	40E	tba	45E	42E	44E
Incl. Premium/Premium Plus equipment lines	40E/41E	tba	45E	42E	44E
Insurance ratings may vary depending on model line and specification. Please refer to http://www.thatcham.org/abigrouprating/ for further details					

[1]Figures according to Directive 80/1269/EEC in the currently applicable version [2]Electronically limited
[3]Figures according to Directive 92/21/EC, version 95/48/EC (kerb weight with fuel tank 90% full, driver, 68 kg, and luggage, 7 kg) for standard-specification vehicles. Optional extras and accessories will generally increase this figure and reduce the payload capacity accordingly
[4]All figures are based on a standard specification with the smallest tyre size [5]The choice of wheels and transmission may affect CO_2 emissions and corresponding Road Fund Licence
[6]EUDC: extra-urban driving cycle. Testing procedures adhere to EU Directive 93/116

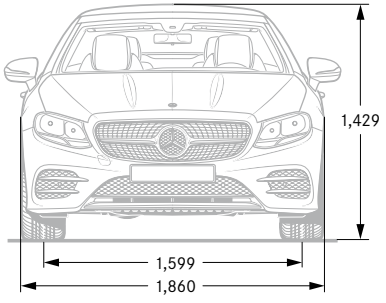

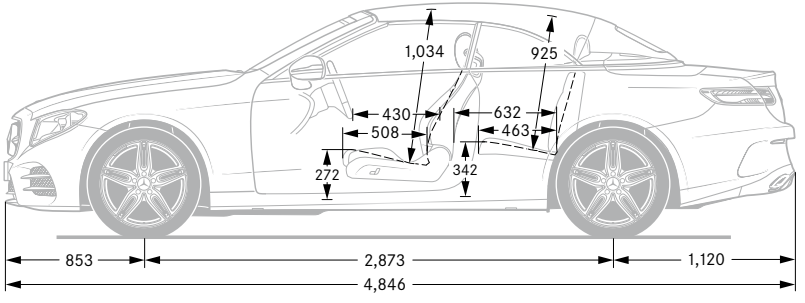

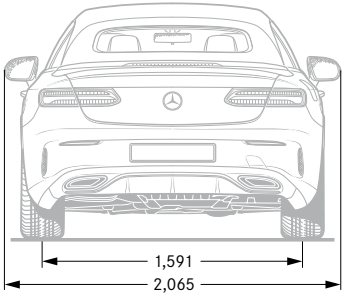

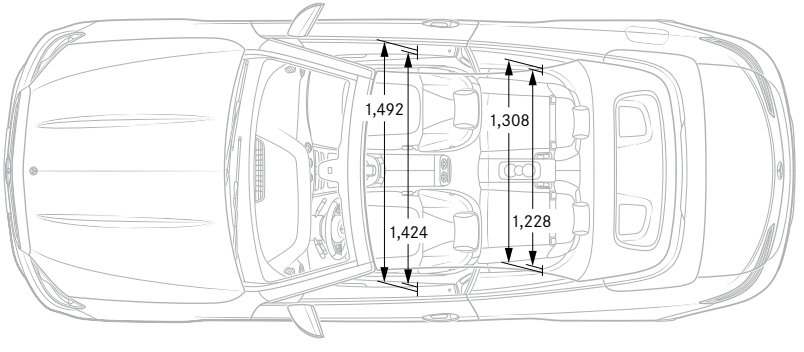

The figures on pages 51–54 are correct at time of publication. Please refer to the government website for latest data – http://carfueldata.direct.gov.uk/
All measurements in millimetres. The dimensions shown are mean values and apply to standard-specification, unladen vehicles

Road Fund Licence



All road vehicle registrations are subject to Vehicle Excise Duty (Road Fund Licence), which varies in accordance with the vehicle's CO_2 emissions. A first year rate for each taxation band will apply. The table below shows the bands (A–M) created by the DVLA and the corresponding Road Fund Licence. CO_2 emissions are listed in the technical data on page 47, and the relevant Excise Duty is reflected in the on-the-road prices on page 8.

Band	CO_2 emissions	First year rate (£)	Standard rate (£)	Premium rate (£)[1]
A	0 g/km	0.00	0.00	310.00
B	1 to 50 g/km	10.00	140.00	450.00
C	51 to 75 g/km	25.00	140.00	450.00
D	76 to 90 g/km	100.00	140.00	450.00
E	91 to 100 g/km	120.00	140.00	450.00
F	101 to 110 g/km	140.00	140.00	450.00
G	111 to 130 g/km	160.00	140.00	450.00
H	131 to 150 g/km	200.00	140.00	450.00
I	151 to 170 g/km	500.00	140.00	450.00
J	171 to 190 g/km	800.00	140.00	450.00
K	191 to 225 g/km	1,200.00	140.00	450.00
L	226 to 255 g/km	1,700.00	140.00	450.00
M	over 255 g/km	2,000.00	140.00	450.00

[1] Premium rate only applicable to vehicles where the list price is over £40,000 including any factory-fitted options, standard UK delivery charge, number plates, fuel and VAT

Services and insurance

Mercedes-Benz Service Care

We believe that servicing costs should be as flexible and affordable as possible for your E-Class, which is why we offer Service Care, an easy way to budget for all your servicing costs. It spreads your bills into manageable payments based on whether you have a new or used Mercedes-Benz.

With Service Care we guarantee the price of parts and labour for up to three services and safeguard against any further inflation. It also covers the cost of all recommended service items including brake fluid, spark plugs, air filters, fuel filters and screen wash.

You can choose either to add your servicing costs into your monthly spend or pay the full amount in a one-off payment, giving you peace of mind that they are taken care of for the period of the plan.

To receive a personalised Service Care plan recommendation visit the Service Care Calculator at servicecarerates.mercedes-benz.co.uk

Warranty and breakdown cover

Every Mercedes-Benz comes with a three-year unlimited mileage warranty against manufacturing or material defects[1] and up to 30 years warranty against perforation due to corrosion from the inside out.[2] What's more, it's also covered by Mercedes-Benz Roadside Assistance – a unique package comprising up to 30 years pan-European breakdown assistance.[2]

Insurance

Since our name is synonymous with reliability, who better to trust with your motor insurance? Mercedes-Benz Insurance provides a motor insurance policy specifically designed to give you the cover you would expect from Mercedes-Benz. For a motor insurance quotation, call **0345 600 2180**.*

[1]Applies to vehicles sold by Mercedes-Benz in the UK to its franchised Retailers [2]Subject to full Terms and Conditions, dependent on date of registration, available upon request Mercedes-Benz Motor Insurance is underwritten by Aviva Insurance UK Limited. Credit provided, subject to status, by Mercedes-Benz Financial Services UK Ltd, MK15 8BA *For joint protection, calls may be recorded and/or monitored. All calls charged at local rate. We may decline to quote in some circumstances

Mercedes me connect



Mercedes me connect enables you to connect to your car via desktop, tablet or smartphone via an app. It provides access to services that enhance your Mercedes-Benz experience and fit effortlessly into your daily digital routine.[1]

Standard Services.

Available on all models, except G-Class.

- **Emergency Call** – if there's an accident, this feature automatically shares your vehicle location and status for a fast response from the emergency services
- **Accident & Breakdown Management** – contact our Customer Assistance Centre with a single button for fast breakdown recovery
- **Telediagnostics** – automatically detects and shares details of any vehicle wear and tear with you, and shares the data with your Retailer
- **Maintenance Management** – reminds you when your service is due and automatically shares maintenance data with your Retailer
- **Parking Time Assist** – track the time on your parking meter and receive an alert when it's due to expire

Vehicle Setup.

These services come as standard if you have COMAND Online. Available as an optional £69 upgrade for all other customers.

- **Personal Profile** – store your preferences, such as your favourite radio stations and apps, to create your personal driver profile
- **Maintenance (Vehicle Status)** – check safety information, such as coolant level and brake pad condition, so you can be sure your car is safe and ready to drive
- **Remote Door Unlock** – lock and unlock your car remotely, wherever you are in the world
- **Send to Car Function** – search for destinations on your smartphone, tablet or desktop, then send the routes direct to your car for navigation

[1] Currently unavailable in the Channel Islands and the Isle of Man

Mercedes me Vehicle Set-up package

Standard on all models with COMAND Online. Available to purchase for an additional £69.00 (incl. VAT) for all other models.

- **Personal profile** – store your preferences, such as your favourite radio stations and apps, to create your personal driver profile.
- **Trip information and vehicle status** – get remote access to the vehicle's trip data such as fuel level, mileage, condition of brake pads and tyre pressure.
- **Remote door locking and unlocking** – lock and unlock your car remotely, wherever you are in the world.
- **Send to Car** – search for destinations on your smartphone, tablet or desktop, then send the routes direct to your car for navigation.

Mercedes me Vehicle Monitoring package

Available to purchase for an additional £69.00 (incl. VAT) for all models (including new E-Class).

- **Geofencing** – set up a geographical boundary and receive alerts whenever your car enters or leaves this area.
- **Vehicle Tracker** – track the location of your car anywhere in the world.
- **Parked Vehicle Locator** – locate your parked vehicle within a range of one mile and plot a route back to it.

To find out more about Mercedes me services and applications, visit the Mercedes me connect store https://shop.mercedes-benz.com/en-gb/connect or contact your local Retailer.

Mercedes me

Mercedes-Benz Finance

Why should you finance with Mercedes-Benz?

At Mercedes-Benz we believe a great driving experience should be matched by an equally great ownership experience. That is why we put just as much thought, time and effort into designing our finance options, our service plans and our insurance cover as we do into our vehicles.

We are not in the business of simply providing a loan to fund the purchase of your dream vehicle. We look on it as a journey that we take with you, from the moment you choose your new Mercedes-Benz, to helping you in choosing your next one.

If you would like to find out more about any of our current offers, simply call into your local Mercedes-Benz Retailer where one of our Business Managers will be more than happy to talk you through anything you need to know.

Helping you find the right solution.

You should find our finance packages are more convenient than a traditional personal loan because:

- Funds are immediately available – no waiting for cheques or loans to clear.
- There is no security required – either against your home or other assets.
- We have clear and transparent rates – the APR we quote is the APR you get.
- We have friendly Business Managers – experts in vehicle finance who can talk you through all of your plans in detail.

One of our most popular finance products is Mercedes-Benz Agility (our Personal Contract Purchase product). We also offer Contract Hire, Operating Lease and Hire Purchase solutions. If you would like to find out more about these speak to your Retailer or visit www.mercedes-benz.co.uk/fandi.

Mercedes-Benz Agility (our PCP product).

At the start of an Agility agreement, you put down a deposit and decide the term of your agreement and your annual mileage. You will be advised of the Guaranteed Future Value, which offers you the reassurance of knowing exactly what you will need to pay to own the vehicle outright in the future (this is known as the Optional Purchase Payment).

Throughout your agreement you simply pay your agreed monthly payments and when the agreement comes to an end you either purchase, hand back or part-exchange your vehicle.



Agility features:

- Fixed regular payments mean you can easily budget.
- Payments are based only on a proportion of the vehicle's value, keeping your monthly payments lower.
- Our Guaranteed Future Value avoids the risk of unplanned depreciation of your vehicle.
- You defer your ownership decision until the end of the agreement.

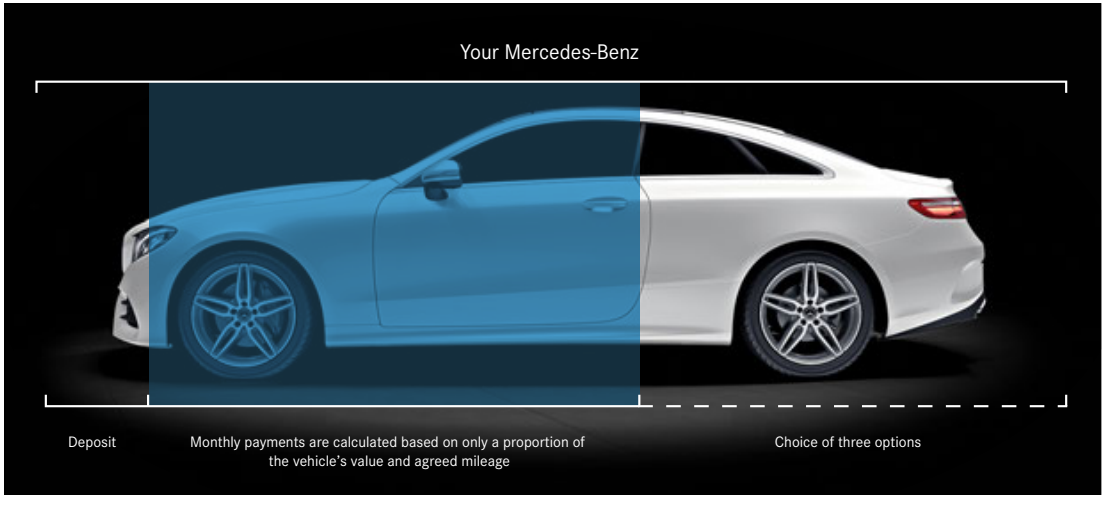

At the end of your agreement you have three options to choose from.

Option 1: Purchase your Mercedes-Benz.
Purchase your Mercedes-Benz by paying the Optional Purchase Payment and Purchase Activation Fee.[1] This will complete the purchase of your Mercedes-Benz, leaving you free to simply enjoy your vehicle.

Option 2: Hand back your Mercedes-Benz.
If you decide to return your vehicle to us, it must be in line with our Vehicle Return Standards,* as vehicle condition, excess mileage and other charges may be payable.

Option 3: Part-Exchange for a new vehicle.
Purchase your Mercedes-Benz by paying the Optional Purchase Payment and Purchase Activation Fee.[1] This will complete the purchase of your Mercedes-Benz, leaving you free to part-exchange for a new vehicle.

[1]Please note the 'Purchase Activation Fee' of £10 will be debited from your account *To find out more information about our Vehicle Return Standards please visit http://mercedes-benz.co.uk/vrs

› View offers

› Book a test drive

› Find a Retailer

› View the Range Guide

Follow us on the following social media channels:

facebook.com/mercedesbenzuk

twitter.com/mercedesbenzuk

youtube.com/mercedesbenzuk

instagram.com/mercedesbenzuk

Effective from 1 December 2017 Production. Information correct at time of publication.
Prices and specifications are subject to change without prior notice.
MBC238PL/0118

Mercedes-Benz Cars UK Limited, Tongwell, Milton Keynes, MK15 8BA. Company number 2448457. www.mercedes-benz.co.uk