S-Class Saloon

Effective from 21 March 2017 Production.

Mercedes-Benz

Contents

Model prices 11
Finance offers 12
SE and AMG Line 16
Premium and Premium Plus equipment lines 20
Mercedes-AMG models 22
Executive equipment line 26
Mercedes-AMG driver training 28
Pricing summary for Executive, Premium and Premium Plus equipment lines 30
Standard equipment 31
Wheels 43
Driving Assistance package 45
Rear Seat Reclining package and Individual Rear Seats package 46
Rear Seat Comfort package 48
Optional equipment 50
Genuine Accessories 63
Colours and materials 66
Technical data 70
Road Fund Licence 74
Services and insurance 75
Mercedes me 76
Mercedes-Benz Finance 78
Chargemaster Homecharge 80

The hard facts to melt your heart

At Mercedes-Benz we appreciate the importance of detail. Over the following pages you'll find model prices and a breakdown of standard and optional equipment, as well as details of the comprehensive services and benefits that are available to every Mercedes-Benz driver.

See Mercedes-Benz in a new light. Now is the time to get yourself behind the wheel of an S-Class. Choose from a number of attractive finance offers. Please see pages 12–15 for further details, or visit www.mercedes-benz.co.uk/offers

Of course, some things have to be experienced to be truly appreciated, such as the qualities that set a Mercedes-Benz apart. Which is why we'd like to invite you for a test drive at your local Mercedes-Benz Retailer. Alternatively, you can make arrangements by visiting www.mercedes-benz.co.uk/testdrive

For more information visit www.mercedes-benz.co.uk or call 0333 222 0500.

S W 2226

S W 2226

Model features optional equipment at an additional cost.

Model features optional equipment at an additional cost.

Model features optional equipment at an additional cost.

Model features optional equipment at an additional cost.

S V 1222

Model prices

Engine	Model line	Transmission	CO_2	Basic RRP excl. VAT (£)	Total RRP incl. VAT (£)	Road Fund Licence (£)[1]	Rec. OTR price (£)[2]	P11D value (£)	BiK tax rate 2017/18 (%)
S 300 h Diesel – 2,143 cc, 4-cylinder, 204 hp/150 kW Electric motor – 27 hp/20 kW	AMG Line L	7G-TRONIC PLUS 7-speed automatic	120	62,566.67	75,080.00	150.00	75,900.00	75,695.00	23
S 350 d Diesel – 2,987 cc, 6-cylinder, 258 hp/190 kW	AMG Line	9G-TRONIC PLUS 9-speed automatic	146	58,929.17	70,715.00	200.00	71,585.00	71,330.00	31
	SE L	9G-TRONIC PLUS 9-speed automatic	141	57,962.50	69,555.00	200.00	70,425.00	70,170.00	30
	AMG Line L	9G-TRONIC PLUS 9-speed automatic	148	61,262.50	73,515.00	200.00	74,385.00	74,130.00	31
S 500 e Petrol – 2,996 cc, 6-cylinder, 333 hp/245 kW Electric motor – 116 hp/85 kW	AMG Line L	7G-TRONIC PLUS 7-speed automatic	65	75,829.17	90,995.00	15.00	91,680.00	91,610.00	13
S 500 Petrol – 4,663 cc, 8-cylinder, 455 hp/335 kW	AMG Line L	9G-TRONIC PLUS 9-speed automatic	196	75,712.50	90,855.00	1,200.00	92,725.00	91,470.00	37
S 600 Petrol – 5,980 cc, 12-cylinder, 530 hp/390 kW	AMG Line L	7G-TRONIC PLUS 7-speed automatic	268	119,379.17	143,255.00	2,000.00	145,925.00	143,870.00	37
Mercedes-AMG									
Mercedes-AMG S 63 Petrol – 5,461 cc, 8-cylinder, 585 hp/430 kW	–	AMG SPEEDSHIFT MCT 7-speed automatic	237	102,116.67	122,540.00	1,700.00	124,910.00	123,155.00	37
Mercedes-AMG S 65 Petrol – 5,980 cc, 12-cylinder, 630 hp/463 kW	–	AMG SPEEDSHIFT PLUS 7G-TRONIC 7-speed auto.	279	152,725.00	183,270.00	2,000.00	185,940.00	183,885.00	37

[1] A different first year rate of Vehicle Excise Duty (Road Fund Licence) applies for new cars. Please refer to page 74 for the relevant rate for the second and subsequent years

[2] Recommended on-the-road price: these prices reflect the Road Fund Licence applicable to the standard model plus £670.00 additional costs necessary to put your car on the road. Included are a standard UK delivery charge (£540.00 incl. VAT), new vehicle registration fee (£55.00), number plates (£25.00 incl. VAT) and fuel (£50.00 incl. VAT). VAT is calculated at the standard rate of 20%.

Mercedes-Benz Finance

It comes with a specification list worth exploring

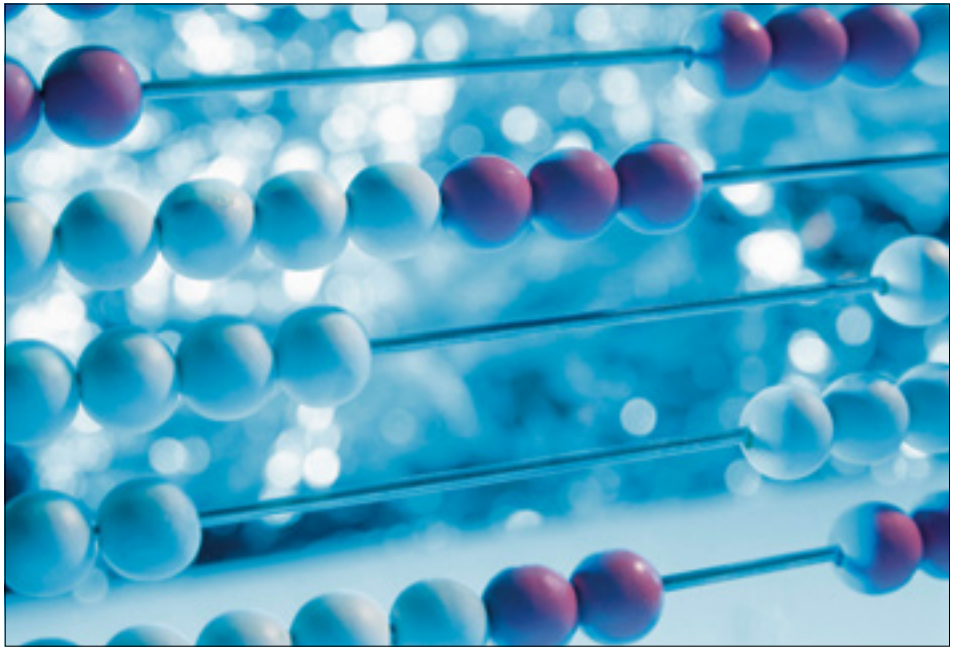

S 350 d AMG Line Saloon (representative example)

Based on 10,000 miles per annum

36 monthly payments of[1]	**£549.00**
Customer deposit	**£10,999.00**
On-the-road price	**£71,585.00**
Retailer deposit contribution	**£13,147.00**
Optional purchase payment[2]	**£27,675.00**
Amount of credit	**£47,439.00**
Duration of agreement	**36 months**
Total amount payable[3]	**£71,585.00**
Purchase activation fee[2]	**£0.00**
APR	**0.0%**
Fixed interest rate	**0.00%**
Excess mileage	**24p per mile**

Example offers – 0% APR Representative	Automatic	Metallic	On-the-road price	Retailer deposit contribution	Customer deposit	36 monthly payments of[1]
S 350 d SE L Saloon	●	●	£69,675.00	£12,142.00	£10,529.00	£589.00
S 350 d AMG Line L Saloon	●	●	£73,635.00	£12,142.00	£10,999.00	£579.00
S 500 e AMG Line L Saloon	●	●	£90,930.00	£12,142.00	£9,544.00	£979.00

● Standard equipment

Mercedes-Benz Service Care

- Mercedes-Benz trained Technicians
- Maintained by Mercedes-Benz Retailers
- Meets requirements of Mercedes-Benz Agility finance agreement

Mercedes-Benz Motor Insurance

- 24/7 UK accident recovery
- We use Mercedes-Benz GenuineParts
- To qualify for up to 10% discount online, go to **www.mercedes-benz.co.uk/motorinsurance**
- Alternatively, call Mercedes-Benz Motor Insurance now on **0345 600 2180**[4] for an annual quote

We may decline to quote in some circumstances. Mercedes-Benz Motor Insurance is underwritten by Aviva Insurance Limited

Content relating to finance is promoted by Mercedes-Benz Finance. Your Retailer may offer finance on behalf of other companies.

Orders/credit approvals on selected S-Class Saloon models only, between 1 April and 30 June 2017, registered by 30 September 2017; excluding Mercedes-AMG models. Some combinations of features/options may not be available. Please contact your local Mercedes-Benz Retailer for availability

[1] Based on a Mercedes-Benz Agility agreement. Vehicle condition, excess mileage and other charges may be payable. Quotations available on request for alternative contract lengths and mileages. Guarantees may be required. Credit provided subject to status by Mercedes-Benz Finance, MK15 8BA

[2] Payable if you exercise the option to purchase the car

[3] Includes optional purchase payment, purchase activation fee and Retailer deposit contribution (where applicable)

[4] Calls are charged at local rate and may be recorded

Mercedes-Benz Finance

Even the finance offer is beautifully put together

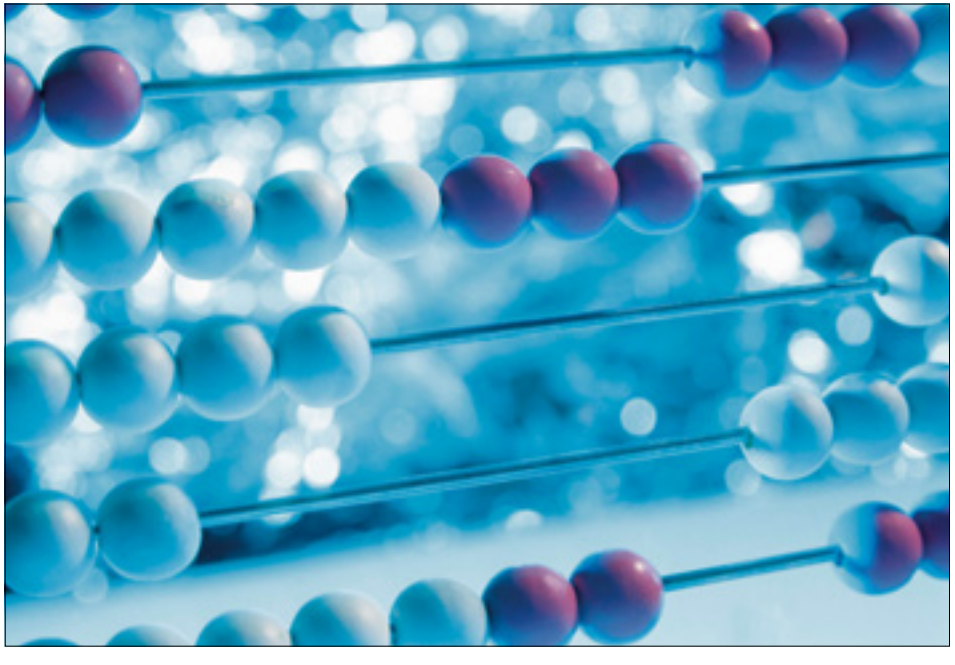

Mercedes-AMG S 63 L Saloon (representative example)

Based on 10,000 miles per annum

36 monthly payments of[1]	£1,599.00
Customer deposit	£13,049.00
On-the-road price	£124,910.00
Retailer deposit contribution	£15,682.59
Optional purchase payment[2]	£49,525.00
Amount of credit	£96,178.41
Duration of agreement	36 months
Total amount payable[3]	£135,830.59
Purchase activation fee[2]	£10.00
APR	5.0%
Fixed interest rate	4.91%
Excess mileage	46.8p per mile

Example offer – 5.0% APR Representative	Automatic	Metallic	On-the-road price	Retailer deposit contribution	Customer deposit[3]	36 monthly payments of[1]
Mercedes-AMG S 65 L Saloon	●	●	£185,940.00	£15,682.59	£13,049.00	£2,945.70

● Standard equipment

Mercedes-Benz Service Care

- Mercedes-Benz trained Technicians
- Maintained by Mercedes-Benz Retailers
- Meets requirements of Mercedes-Benz Agility finance agreement

Mercedes-Benz Motor Insurance

- 24/7 UK accident recovery
- We use Mercedes-Benz GenuineParts
- To qualify for up to 10% discount online, go to **www.mercedes-benz.co.uk/motorinsurance**
- Alternatively, call Mercedes-Benz Motor Insurance now on **0345 600 2180**[4] for an annual quote

We may decline to quote in some circumstances. Mercedes-Benz Motor Insurance is underwritten by Aviva Insurance Limited

Content relating to finance is promoted by Mercedes-Benz Finance. Your Retailer may offer finance on behalf of other companies.

Orders/credit approvals on selected Mercedes-AMG S-Class Saloon models only, between 1 April and 30 June 2017, registered by 30 September 2017; excluding non-Mercedes-AMG models. Some combinations of features/options may not be available. Please contact your local Mercedes-Benz Retailer for availability

[1] Based on a Mercedes-Benz Agility agreement. Vehicle condition, excess mileage and other charges may be payable. Quotations available on request for alternative contract lengths and mileages. Guarantees may be required. Credit provided subject to status by Mercedes-Benz Finance, MK15 8BA

[2] Payable if you exercise the option to purchase the car

[3] Includes optional purchase payment, purchase activation fee and Retailer deposit contribution (where applicable)

[4] Calls are charged at local rate and may be recorded

S-Class SE

Optional 19" alloy wheels – 5-twin-spoke design (code R17)

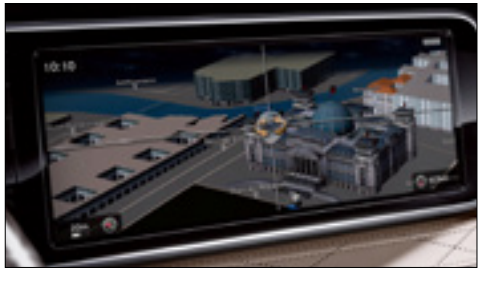

The S-Class SE offers the most comprehensive equipment for your convenience and all-round protection. AIRMATIC air suspension with Adaptive Damping System is standard, along with a 7G-TRONIC PLUS 7-speed automatic transmission with steering wheel gearshift paddles. On the exterior, you'll also notice the LED Intelligent Light System, which adapts to the conditions around you, as well as 18" alloy wheels in a 5-twin-spoke design.

The welcoming interior is fitted with a steering wheel in nappa leather, dark brown eucalyptus wood trim and exquisite leather upholstery. The innovative combination of COMAND Online and instrument cluster with high-definition TFT display brings new clarity into the cockpit. As you'd expect, the cabin is an oasis of relaxation – with luxury automatic climate control and Frontbass speakers for the perfect sound.

Exterior
18" alloy wheels – 5-twin-spoke design with 245/50 tyres
Active Parking Assist including PARKTRONIC and reversing camera
AIRMATIC air suspension with level adjustment and Adaptive Damping System
ECO start/stop function
Exterior mirrors – electrically adjustable, folding and heated
Headlamps – LED Intelligent Light System

Interior
2-spoke multifunction steering wheel
Ambient lighting – choice of seven colour settings
Front seats – full electric adjustment and four-way lumbar support
Leather upholstery
THERMOTRONIC – luxury automatic climate control, two-zone
Widescreen cockpit consisting of an Instrument Display and Media Display

Trim and Upholstery

Dark brown eucalyptus wood

Leather – black

Leather – silk beige/espresso brown

Leather – crystal grey/seashell grey

Leather – nut brown/black

S-Class AMG Line

The S-Class AMG Line enhances the sporty appeal of this stunning saloon. It comes with dynamic AMG bodystyling, comprising front apron, rear apron and side skirts, as well as 19" AMG alloy wheels in 5-twin-spoke design with perforated brake discs, and 'Mercedes-Benz' lettering on the brake calipers. Equally prominent are the visible twin tailpipes on the S 500 L and S 600 L, which are integrated into the bumper. The interior continues with athletic flair, featuring black poplar wood trim and a 3-spoke multifunction steering wheel, as well as brushed stainless steel sports pedals and velour floor mats with 'AMG' lettering.

Exterior
19" AMG alloy wheels – 5-twin-spoke design with 245/45 front and 275/40 rear tyres
Active Parking Assist including PARKTRONIC and reversing camera (360° camera for S 600 L)
AMG bodystyling – front apron, rear apron and side skirts
Headlamps – LED Intelligent Light System

Interior
Ambient lighting – choice of seven colour settings
AMG brushed stainless steel sports pedals with rubber studs
Front Seat Memory package (S 500 L and S 600 L only)
Leather upholstery (Exclusive nappa leather upholstery for S 600 L)
Velour floor mats with 'AMG' lettering
Widescreen cockpit consisting of an Instrument Display and Media Display

Trim and Upholstery – all models except S 600 L

Black poplar wood

Leather – black

Leather – silk beige/espresso brown

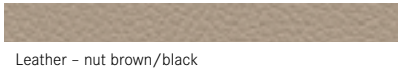

Leather – crystal grey/seashell grey

Leather – nut brown/black

S 600 L only

Black poplar wood[1]

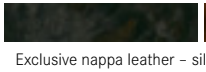

Brown burr walnut wood[1]

Exclusive nappa leather – black

Exclusive nappa leather – silk beige/espresso brown

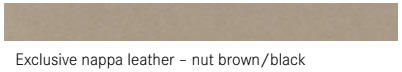

Exclusive nappa leather – crystal grey/seashell grey

Exclusive nappa leather – nut brown/black

Exclusive nappa leather – porcelain/black

[1] Choice of either black poplar or brown burr walnut wood trim

Premium and Premium Plus equipment lines for S 350 d, S 350 d L, S 300 h

360° camera

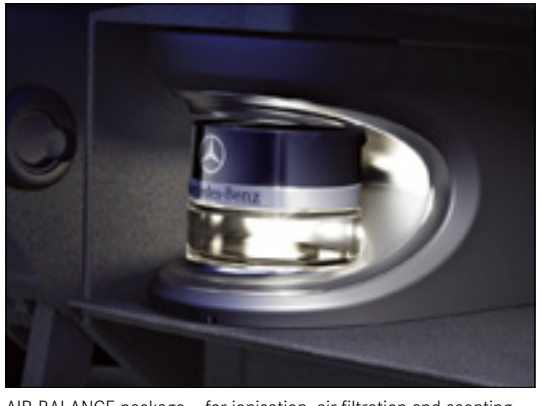

AIR-BALANCE package – for ionisation, air filtration and scenting

Comfort-ventilated front seats

Electric panoramic glass sunroof

Front Seat Comfort package

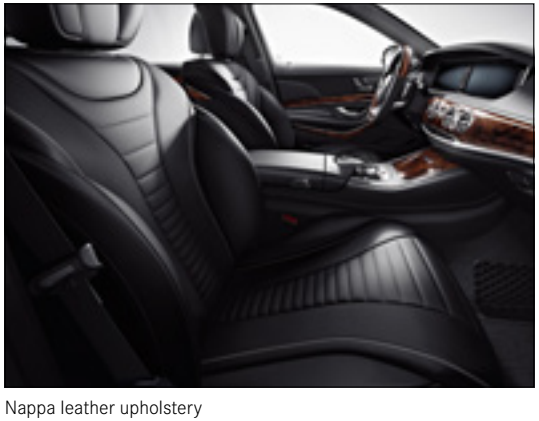

Nappa leather upholstery

Item	Notes	SE Premium £3,895.00[1] (code DP0)	AMG Line Premium £4,395.00[1] (code DP0)	SE Premium Plus £6,695.00[1] (code DP1)	AMG Line Premium Plus £7,195.00[1] (code DP1)
Electric panoramic glass sunroof		■	■	■	■
Front Seat Memory package	Additional four-way electric lumbar support for front passenger seat; front seats, luxury front head restraints, steering column and exterior door mirrors – electrically adjustable with memory	■	■	■	■
KEYLESS-GO Comfort package	The vehicle can be conveniently unlocked, started and locked with this access and drive authorisation system – simply by carrying the electronic key. The engine can be switched on and off by pressing the start/stop button in the ignition lock. The hands-free access allows hands-off, fully automatic opening and closing of the boot lid by performing a kicking movement under the rear bumper. The package includes handle recess illumination so that the door handles are easily visible in dark lighting conditions	■	■	■	■
Upholstery – nappa leather		■	■	■	■
20" AMG alloy wheels (4) – multi-spoke design		–	■	–	■
360° camera		–	–	■	■
AIR-BALANCE package – adjustable fragrancing with four different scents	Fragrance generator with perfume flask in glove compartment; improved filter system between intake and distribution system; oxygen ioniser in side air duct	–	–	■	■
Burmester® surround sound system	13 speakers and 9-channel DSP amplifier with total output of 590 W. Includes voice amplification system which makes it easier to communicate with the rear passengers from the front. Two microphones in the interior mirror are also used to pick up speech for the hands-free telephone system. These signals are then discreetly amplified depending on the amount of driving noise, and continuously adjusted for the speaker's volume and the ambient noise level. Not in conjunction with Burmester® high-end 3D surround system (code 811)	–	–	■	■
Comfort-ventilated front seats	Includes seat heating and cooling	–	–	■	■
Front Seat Comfort package	Active multi-contour front seats with dynamic and massage function	–	–	■	■

■ Included – Not included [1]Including VAT

Mercedes-AMG S 63

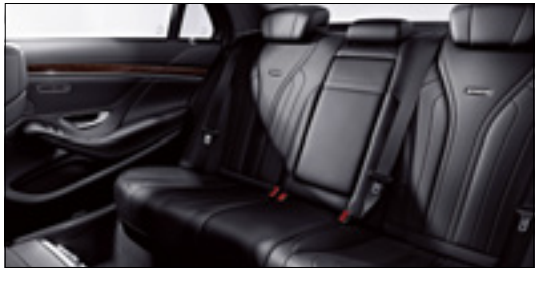

The Mercedes-AMG S 63 is powered by a mighty V8 biturbo engine delivering 585 hp (430 kW) and a maximum 900 Nm torque. All this energy is channelled by the AMG SPEEDSHIFT MCT 7-speed sports transmission with Controlled Efficiency drive mode and ECO start/stop function. The exterior features AMG front and rear aprons with silver chrome trim, as well as black inserts on the front apron for optimised airflow. AMG forged wheels, high-performance braking system and AMG logo plus AMG sports exhausts with chromed twin tailpipes complete this powerful ensemble. The style of the Mercedes-AMG S 63 is equally reflected in the interior, with AMG sports seats (with added side bolsters) in nappa leather and contrast stitching, AMG sports steering wheel as well as AMG door sills and sport pedals.

Exterior
19" AMG alloy wheels – 10-spoke design with 255/45 front and 285/40 rear tyres
Active Parking Assist including PARKTRONIC and reversing camera
Exterior mirrors – electrically adjustable, folding and heated
Headlamps – LED Intelligent Light System

Interior
Ambient lighting – choice of seven colour settings
AMG door sill panels in brushed stainless steel at front and rear, with 'AMG' lettering
AMG sports seats with AMG V8-specific seat layout, optimised lateral support and AMG badge in front and rear backrests
AMG sports steering wheel in 3-spoke design in nappa leather with perforated grip area, 12 buttons, decorative topstitching and silver-coloured aluminium gearshift paddles
AMG widescreen cockpit consisting of an Instrument Display and Media Display including AMG main menu and AMG start-up screen
THERMOTRONIC – luxury automatic climate control, two-zone Three different climate modes: Focused, Medium and Diffuse

Trim and Upholstery

Black poplar wood	Nappa leather – black
Nappa leather – silk beige/espresso brown	Nappa leather – crystal grey/seashell grey
Nappa leather – nut brown/black	Nappa leather – porcelain/black

Mercedes-AMG S 65

Optional AMG high-performance ceramic composite brake system shown (code B07)

The AMG styling features a unique front apron, rear apron and side sill panels with high-gloss chrome flics and inserts. Inside, the theme continues with equally exclusive leather and finest trim details. The AMG sport seats with AMG-specific diamond design offer optimum lateral support. The AMG sports steering wheel and airbag cover are fitted with nappa leather, featuring silver-coloured aluminium gearshift paddles.

The driving force behind the S 65 AMG L is an AMG V12 biturbo engine that combines immense power with outstanding refinement. Its 630 hp (463 kW) produces an astonishing maximum torque of 1,000 Nm.

In fact, there is probably only one thing more powerful than the AMG V12: your desire to drive it.

Exterior
20" AMG alloy wheels – multi-spoke design with 255/45 front and 285/35 rear tyres
Active Parking Assist including PARKTRONIC and reversing camera
Exterior mirrors – electrically adjustable, folding and heated
Headlamps – LED Intelligent Light System

Interior
AIR-BALANCE package – adjustable fragrancing with four different scents
AMG door sill panels in brushed stainless steel at front and rear, with 'AMG' lettering
AMG sports seats with AMG V12-specific seat layout, optimised lateral support and AMG badge in front and rear backrests
AMG sports steering wheel in 3-spoke design in nappa leather with perforated grip area, 12 buttons, decorative topstitching and silver-coloured aluminium gearshift paddles
AMG widescreen cockpit consisting of an Instrument Display and Media Display including AMG main menu and AMG start-up screen
Executive equipment line
Rear Seat Reclining package

Trim and Upholstery

Black poplar wood[1]

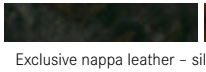

Brown burr walnut wood[1]

Exclusive nappa leather – black

Exclusive nappa leather – silk beige/espresso brown

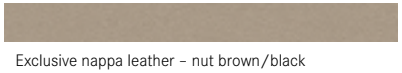

Exclusive nappa leather – crystal grey/seashell grey

Exclusive nappa leather – nut brown/black

Exclusive nappa leather – porcelain/black

[1] Choice of either black poplar or brown burr walnut wood trim

Executive equipment line

Executive equipment line shown with optional nappa leather

Rear head restraint with comfort cushion

THERMOTRONIC – luxury automatic climate control for the rear

Images shown provide a general indication of interior furnishings. The manufacturer reserves the right to make changes to the design form and specification. Some of the models, features, optional extras and colours shown may not be available in your country or may only be available in a different specification. For more current and specific information in relation to the range of models and features, please contact your nearest authorised Mercedes-Benz Retailer

Given that the S-Class is a thing of beauty in its own right, you might think that there isn't much room for improvement.

With the Executive equipment line, rear passengers can enjoy long journeys in total relaxation. At the touch of a button seats move into a comfortable reclining position, and electrically operated blinds for the rear and side windows shield the occupants from direct sunlight. And with THERMOTRONIC luxury automatic climate control for the rear they enjoy even greater comfort, since temperature and air distribution can be individually adjusted for the left and right sides.

Luxury rear head restraints with an additional comfort cushion ensure the best possible seating comfort for the rear seats.

Executive equipment line – including luxury items as listed below.

Standard on S 600 L and Mercedes-AMG S 65	
S 500 L and Mercedes-AMG S 63	**Total incl. VAT £3,510.00**
Short wheelbase	**£4,335.00**
Long wheelbase	**£4,000.00**

Executive equipment line (code DA1)
Backrest angle adjustable up to 37°
Closing aid for doors and boot lid (code 883)
Comfort-ventilated rear seats with cooling and heating function
Electrically operated rear seats with memory function
Luxury rear head restraints with additional comfort cushion
Roller Blind package with electrically operated blinds for rear and side window (code P09)
THERMOTRONIC – luxury automatic climate control, rear (code 582)

Exclusive driver training for Mercedes-AMG S 63 and S 65 owners

All Mercedes-AMG S 63 and S 65 customers are invited to a complimentary AMG Driving Academy Training experience at Mercedes-Benz World.

With friendly one-to-one tuition from a professional Mercedes-AMG driver, your training will be personalised to you. You'll push Mercedes-AMG driving performance and your driving skills to the limits on our track and purpose-built low friction dynamic handling facilities.

Through high-speed and adrenaline-fuelled exercises you'll experience oversteer, understeer, slaloms and many more performance driving skills. Designed as part of your ownership experience, this will lay the foundations to master a high-performance vehicle, develop driving skills with maximum enjoyment and prepare you to take full command of your own Mercedes-AMG.

TERMS AND CONDITIONS

The following only are eligible: the first purchaser/registered keeper of a newly-registered Mercedes-AMG S 63 and S 65; the second owner/registered keeper of a Mercedes-AMG purchased from a Mercedes-Benz Retailer, where the vehicle is less than 90 days from registration. The AMG Driving Academy Training experience is the AMG BASIC-Training as detailed in the further information above and must be booked and taken within six months of delivery of your Mercedes-AMG S 63 and S 65; it cannot be exchanged and cannot be transferred for any other driving experience. The Training experience is available Monday to Friday only and is subject to availability. Mercedes-Benz UK Limited reserves the right to amend or withdraw this Training experience. Attendees must hold a full UK driving licence. Attendees will be required to sign the Mercedes-Benz World Driving Risk Acknowledgement prior to undertaking the Training experience. The Training experience is also subject to the Mercedes-Benz World Terms and Conditions, as applicable.

Mercedes-Benz World
AMG
DRIVING EXPERIENCES

Pricing summary for Executive, Premium and Premium Plus equipment lines

Model	Recommended OTR price (£)[1]											
	SE	SE Executive	SE Executive Premium	SE Executive Premium Plus	SE Premium	SE Premium Plus	AMG Line	AMG Line Executive	AMG Line Executive Premium[2]	AMG Line Executive Premium Plus[2]	AMG Line Premium[2]	AMG Line Premium Plus[2]
S 300 h L	–	–	–	–	–	–	75,900.00	79,900.00	84,295.00	87,095.00	80,295.00	83,095.00
S 350 d	–	–	–	–	–	–	71,585.00	75,920.00	80,615.00	83,415.00	76,280.00	79,080.00
S 350 d L	70,425.00	74,425.00	78,320.00	81,120.00	74,320.00	77,120.00	74,385.00	78,385.00	83,080.00	85,880.00	79,080.00	81,880.00
S 500 e L	–	–	–	–	–	–	91,680.00	95,190.00	–	–	–	–
S 500 L	–	–	-	-	-	-	92,725.00	96,235.00	-	-	-	–

	Mercedes-AMG	Mercedes-AMG Executive
Mercedes-AMG S 63 L	124,910.00	128,420.00

[1] Recommended on-the-road price: these prices reflect the Road Fund Licence applicable to the standard model plus £670.00 additional costs necessary to put your car on the road. Included are a standard UK delivery charge (£540.00 incl. VAT), new vehicle registration fee (£55.00), number plates (£25.00 incl. VAT) and fuel (£50.00 incl. VAT). Vehicle Excise Duty valid from 1 April 2017. VAT is calculated at the standard rate of 20%

[2] AMG Line Premium and Premium Plus equipment lines include a larger wheel with greater CO_2 emissions and therefore a different rate of Vehicle Excise Duty (Road Fund Licence)

Standard equipment – SE and AMG Line

Headlamps – LED Intelligent Light System

Active Parking Assist including PARKTRONIC

MAGIC VISION CONTROL

Electrically adjustable front seats

CD/DVD drive (part of COMAND Online system with Media Interface)

Traffic Sign Assist

Standard equipment – S 500 e AMG Line L

Driving and operating mode selection

Plug-in charging port in rear bumper

Mode 2 and mode 3 charging cables included

Energy management modes

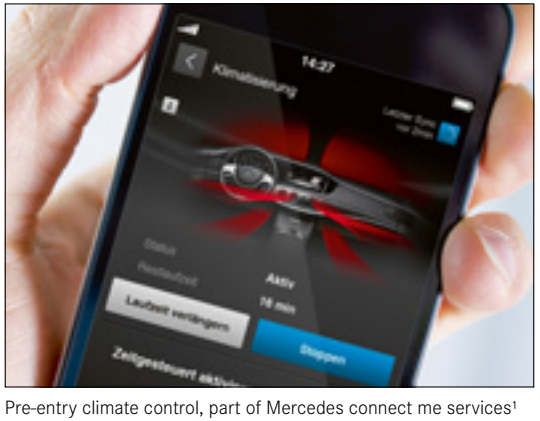

Pre-entry climate control, part of Mercedes connect me services[1]

Anticipatory energy management capabilities

[1] Please contact your Retailer for availability of these services

Standard equipment – S 600 AMG Line L

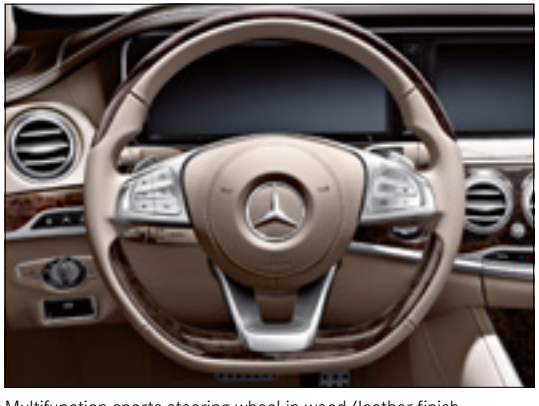

Multifunction sports steering wheel in wood/leather finish

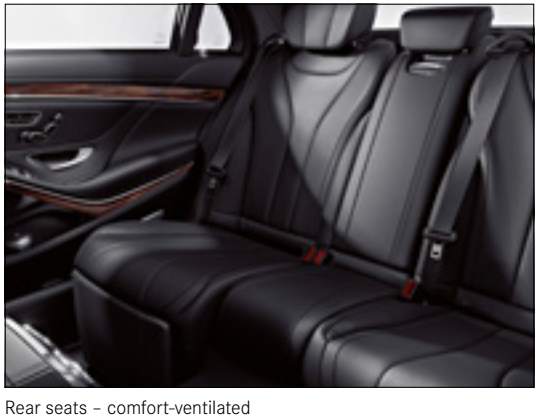

Rear seats – comfort-ventilated

LED tail lamps

Velour floor mats with ‘AMG’ lettering

Front Seat Memory package

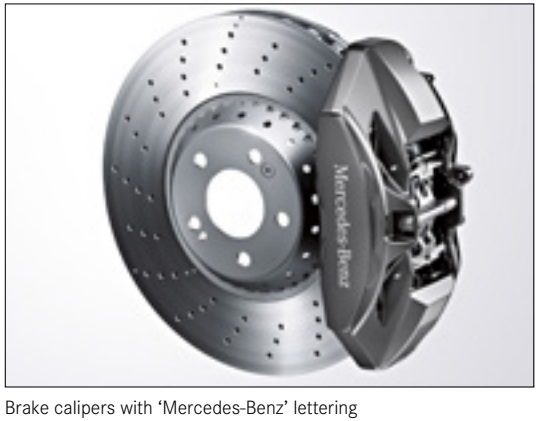

Brake calipers with ‘Mercedes-Benz’ lettering

Item Transmission and Suspension	SE L	AMG Line	S 500 e AMG Line L	S 600 AMG Line L	Mercedes-AMG S 63	Mercedes-AMG S 65
7G-TRONIC PLUS 7-speed automatic transmission with steering column gear selector, steering wheel gearshift paddles (DIRECT SELECT) and SPEEDTRONIC cruise control	●	●	●	●	–	–
AIRMATIC air suspension with level adjustment and Adaptive Damping System	●	●	●	–	–	–
AMG SPEEDSHIFT PLUS 7G-TRONIC automatic transmission with ECO start/stop function and three transmission modes: 'C' (Controlled Efficiency), 'S' (Sport) and 'M' (Manual)	–	–	–	–	–	●
AMG SPEEDSHIFT MCT 7-speed sports transmission with ECO start/stop function and three transmission modes: 'C' (Controlled Efficiency), 'S' (Sport) and 'M' (Manual)	–	–	–	–	●	–
AMG sports suspension based on MAGIC BODY CONTROL Combines outstanding driving dynamics and precision with a high level of comfort	–	–	–	–	●	●
ECO start/stop function	●	●	●	●	–	–
MAGIC BODY CONTROL	–	–	–	●	–	–

Item Steering	SE L	AMG Line	S 500 e AMG Line L	S 600 AMG Line L	Mercedes-AMG S 63	Mercedes-AMG S 65
AMG speed-sensitive sports steering with variable steering ratio	–	–	–	–	●	●
Direct Steering	●	●	●	●	–	–
Steering column – electrically adjustable with EASY-ENTRY function	●	●	●	●	–	–
Steering wheel – 2-spoke multifunction steering wheel	●	–	–	–	–	–
Steering wheel – 3-spoke multifunction sports steering wheel	–	●	●	–	–	–
Steering wheel – 3-spoke multifunction sports steering wheel in wood/leather finish, heated	–	–	–	●	–	–
Steering wheel – AMG sports steering wheel in 3-spoke design in nappa leather with perforated grip area, 12 buttons, decorative topstitching and silver-coloured aluminium gearshift paddles	–	–	–	–	●	●

● Standard ○ Optional – Not available

Item Exterior	SE L	AMG Line	S 500 e AMG Line L	S 600 AMG Line L	Mercedes-AMG S 63	Mercedes-AMG S 65
KEYLESS-GO Comfort package The vehicle can be conveniently unlocked, started and locked with this access and drive authorisation system – simply by carrying the electronic key. The engine can be switched on and off by pressing the start/stop button in the ignition lock. The hands-free access allows hands-off, fully automatic opening and closing of the boot lid by performing a kicking movement under the rear bumper. The package includes handle recess illumination so that the door handles are easily visible in dark lighting conditions	○	○	○	●	●	●
Active Parking Assist including PARKTRONIC and reversing camera	●	●	●	–	●	–
Active Parking Assist including PARKTRONIC and 360° camera	○	○	○	●	–	●
AMG bodystyling – front apron, rear apron and side skirts	–	●	●	●	–	–
AMG bodystyling Comprising S 63-specific front apron featuring cross strut in silver chrome and inserts in high-gloss black, with silver chrome inserts for rear apron and side sill panels	–	–	–	–	●	–
AMG bodystyling Comprising S 65-specific front apron featuring cross strut and flics in high-gloss chrome with high-gloss chrome inserts for rear apron and side sill panels	–	–	–	–	–	●
AMG high-performance composite brake system with 390×36 mm composite brakes at front and 360×26 mm brake discs at rear	–	–	–	–	●	●

Item	SE L	AMG Line	S 500 e AMG Line L	S 600 AMG Line L	Mercedes-AMG S 63	Mercedes-AMG S 65
AMG sports exhaust system with two chrome-plated twin exhaust trims	–	–	–	–	●	●
Charging cable for household socket (mode 2) – 4 m, 8 A	–	–	●	–	–	–
Charging cable for wallbox and public charging stations (mode 3) – 4 m, 16 A	–	–	●	–	–	–
Closing aid for doors and boot lid S 500 L and S 600 L only	–	●	●	●	●	●
Diesel Particulate Filter (DPF) S 300 h L and S 350 d (L)	●	●	–	–	–	–
Doorhold system	●	●	●	●	●	●
Exterior mirrors – electrically adjustable, folding and heated	●	●	●	●	●	●
Electric panoramic glass sunroof	○	○	○	●	●	●
Exhaust system – without visible tailpipes S 350 d (L)	●	–	–	–	–	–
Exhaust system – without twin visible tailpipes, with chrome trim S 300 h L, S 350 d and S 350 d (L)	–	●	–	–	–	–
Exhaust system – with twin visible tailpipes integrated into bumper S 500 L and S 600 L	–	●	●	●	–	–
Headlamps – LED Intelligent Light System LED headlamps with variable light distribution for country roads and motorways, Active Light System, cornering light function, extended fog light function and Adaptive Highbeam Assist	●	●	●	●	●	●

● Standard ○ Optional – Not available

Item Exterior (continued)	SE L	AMG Line	S 500 e AMG Line L	S 600 AMG Line L	Mercedes-AMG S 63	Mercedes-AMG S 65
Infrared-reflective, noise insulating glass all round Standard for S 500 AMG Line L only	○	○	●	●	●	●
LED tail lamps	●	●	●	●	●	●
MAGIC VISION CONTROL – adaptive windscreen wiper system, heated	●	●	●	●	●	●
Remote boot lid release	●	●	●	●	●	●
Tinted glass – green	●	●	●	●	●	●
TIREFIT tyre-sealant kit	●	●	●	●	●	●
'V8 BITURBO' lettering on front wings	–	–	–	–	●	–
'V12 BITURBO' lettering on front wings	–	–	–	–	–	●
'V12' lettering on front wings	–	–	–	●	–	–
Visual differentiation for PLUG-IN HYBRID Badge with 'PLUG-IN HYBRID' lettering on wings (not deselectable) Blue front brake calipers (deselectable with code U53) Blue accentuating rings in headlamps (deselectable with code U53)	–	–	●	–	–	–

Item Interior	SE L	AMG Line	S 500 e AMG Line L	S 600 AMG Line L	Mercedes-AMG S 63	Mercedes-AMG S 65
AIR-BALANCE package – adjustable fragrancing with four different scents	○	○	○	●	○	●
Executive equipment line Backrest angle adjustable up to 37° Closing aid for doors and boot lid (code 883) Comfort-ventilated rear seats with cooling and heating function Electrically operated rear seats with memory function THERMOTRONIC – luxury automatic climate control, rear (code 582) Luxury rear head restraints with additional comfort cushion Roller Blind package (code P09)	○	○	○	●	○	●
Front Seat Comfort package Active multi-contour seats with dynamic and massage function	○	○	○	●	●	●
Front Seat Memory package Additional four-way electric lumbar support for front passenger seat Front seats, front head restraints, steering column and exterior door mirrors – electrically adjustable with memory Standard on S 500 L	○	○	●	●	●	●
Rear Seat Comfort package Active multi-contour rear seats with dynamic and massage function Burmester® surround sound system (code 810) Rear seat entertainment system (code P46)	○	○	○	●	–	–

● Standard ○ Optional – Not available

Item Interior (continued)	SE L	AMG Line	S 500 e AMG Line L	S 600 AMG Line L	Mercedes-AMG S 63	Mercedes-AMG S 65
Rear Seat Reclining package EASY ADJUST luxury front head restraints (code 439) Front passenger seat with extended adjustment Reclining rear seat (up to 43.5°) behind front passenger, and additional leg rest and footrest	○	○	○	●	○	●
Warmth Comfort package Armrest heating in front and rear Heated multifunction steering wheel	○	○	○	●	○	●
12 V socket – on centre console, front and rear, and in boot	●	●	●	●	–	–
Ambient lighting – choice of seven colour settings	●	●	●	●	●	●
AMG brushed stainless steel sports pedals with rubber studs	–	●	●	●	–	–
AMG door sill panels in brushed stainless steel at front and rear, with 'AMG' lettering	–	–	–	–	●	●
AMG emblem embossed in front centre armrest. Front and rear centre armrest with stowage	–	–	–	–	●	●
AMG sports pedals in brushed stainless steel with rubber studs	–	–	–	–	●	●

Item	SE L	AMG Line	S 500 e AMG Line L	S 600 AMG Line L	Mercedes-AMG S 63	Mercedes-AMG S 65
AMG-specific IWC-design analogue clock	–	–	–	–	●	●
AMG sports seats with AMG V8-specific seat layout, optimised lateral support and AMG badge in front and rear backrests	–	–	–	–	●	–
AMG sports seats with AMG V12-specific seat layout, optimised lateral support and AMG badge in front and rear backrests	–	–	–	–	–	●
AMG widescreen cockpit consisting of an Instrument Display and Media Display including AMG main menu and AMG start-up screen	–	–	–	–	●	●
Analogue clock with Mercedes-Benz star	●	●	●	●	–	–
Automatically dimming rear-view mirror and driver's exterior mirror	●	●	●	●	●	●
Brake calipers with 'AMG' lettering	–	–	–	–	●	●
Brake calipers with 'Mercedes-Benz' lettering	–	●	●	●	–	–
Centre armrests – front and rear, with stowage	●	●	●	●	–	–
Cup holders – front (2) and rear (2)	●	●	●	●	–	–
Door sill panels with stainless steel inlays – front with 'Mercedes-Benz' lettering	●	●	●	–	–	–

● Standard ○ Optional – Not available

Item Interior (continued)	SE L	AMG Line	S 500 e AMG Line L	S 600 AMG Line L	Mercedes-AMG S 63	Mercedes-AMG S 65
Electric windows (4) with PRE-SAFE® closing function	●	●	●	●	●	●
Floor mats – AMG Exclusive floor mats with 'AMG' lettering	–	–	–	–	●	●
Floor mats – velour floor mats	●	–	–	–	–	–
Floor mats – velour floor mats with 'AMG' lettering	–	●	●	●	–	–
Front seats – comfort-ventilated	○	○	○	●	○	●
Front seats – full electric adjustment Fore and aft, height, inclination and seat cushion length adjustment, electric head restraint height adjustment and four-way electric lumbar support	●	●	●	●	–	–
Front seats – heated	●	●	●	–	●	–
Garage door opener – integrated in rear-view mirror For questions regarding compatibility please visit www.homelink.com	○	○	○	●	○	●
Glasses stowage compartment	●	●	●	●	●	●
Glove compartment – lockable, air-conditioned and illuminated	●	●	●	●	●	●
Head restraints, rear (3) – electrically lowering	●	●	●	●	●	●

Item	SE L	AMG Line	S 500 e AMG Line L	S 600 AMG Line L	Mercedes-AMG S 63	Mercedes-AMG S 65
Illuminated door sill panels	●	●	●	●	●	●
Illuminated vanity mirrors – front and rear	●	●	●	●	●	●
KEYLESS-GO starting function	●	●	●	●	●	●
Load securing rings in boot	●	●	●	●	–	–
Map pockets on front seat backrests	●	●	●	●	–	–
Outside temperature gauge	●	●	●	●	●	●
Parcel nets in boot and front passenger footwell	●	●	●	●	●	●
Reading lights – front and rear	●	●	●	●	●	●
Rear seats – comfort-ventilated	–	–	–	●	○	●
Rear seats – heated	●	●	●	–	●	–
Rear sill protector – black S 300 h L and S 350 d (L)	●	●	●	–	–	–

● Standard ○ Optional – Not available

Item **Interior (continued)**	SE L	AMG Line	S 500 e AMG Line L	S 600 AMG Line L	Mercedes-AMG S 63	Mercedes-AMG S 65
Rear sill protector – chrome S 500 L and S 600 L only	–	●	●	●	–	–
Stowage compartment in rear seat armrest	●	●	●	●	●	●
THERMOTRONIC – luxury automatic climate control, rear	○	○	○	●	○	●
THERMOTRONIC – luxury automatic climate control, two-zone Three climate modes: Focused, Medium and Diffuse	●	●	●	●	●	●
Trip computer – in multifunction display, showing current fuel consumption	●	●	●	●	●	●
Widescreen cockpit consisting of an Instrument Display and Media Display	●	●	●	●	–	–

Paint, Trim and Upholstery						
Dashboard – upper section in ARTICO leather[1]	●	●	●	–	–	–
Dashboard – upper section in nappa leather	–	–	–	●	–	–
Paint – metallic	●	●	●	●	●	●
Trim – dark brown eucalyptus wood	●	–	–	–	–	–
Trim – black poplar wood	○	●	●	○	●	○

Item	SE L	AMG Line	S 500 e AMG Line L	S 600 AMG Line L	Mercedes-AMG S 63	Mercedes-AMG S 65
Upholstery – Exclusive Nappa Leather package Armrests and lining of centre console in nappa leather with contrast stitching Colour contrast fluting on beltline DINAMICA microfibre roof lining Door panels with hand-stitched facings in nappa leather Exclusive nappa leather upholstery Extended trim parts: additional wood trim in door centre panels and rear air vent covers Nappa leather upper dashboard with diamond-pattern perforations and contrast stitching Perforated diamond pattern in continuation of front door armrests and in rear door seat function control panels Seats in diamond pattern nappa leather with contrast stitching Trim – choice of black poplar or brown burr walnut wood trim (no-cost option)	○	○	○	●	○	●
Upholstery – leather	●	●	●	–	–	–
Upholstery – nappa leather	–	–	–	–	●	–

● Standard ○ Optional – Not available [1]Man-made leather

Item **Safety and Assistance Systems**	SE L	AMG Line	S 500 e AMG Line L	S 600 AMG Line L	Mercedes-AMG S 63	Mercedes-AMG S 65
Driving Assistance package Active Blind Spot Assist, Active Lane Keeping Assist, BAS PLUS with Cross-Traffic Assist, DISTRONIC PLUS with Steer Assist and Stop&Go Pilot, PRE-SAFE® Brake and PRE-SAFE® PLUS	○	○	○	●	●	●
Intelligent Rear Seat Belts package Illuminated seat belt buckle extenders facilitate seat belt fastening on outer rear seats Inflatable three-point seat belts with integrated belt bags on outer seats	○	○	○	●	○	●
Active bonnet – pedestrian safety measure	●	●	●	●	●	●
Adaptive brake lights	●	●	●	●	●	●
Airbags – driver and front passenger	●	●	●	●	●	●
Airbags – front and rear sidebags	●	●	●	●	●	●
Airbags – windowbags	●	●	●	●	●	●
Alarm system with immobiliser and interior protection (MBSS3)	●	●	●	●	●	●
Anti-lock braking system (ABS) with Brake Assist (BAS)	●	●	●	●	●	●
ATTENTION ASSIST Monitors steering behaviour and can help alert to long journey fatigue	●	●	●	●	●	●

Item	SE L	AMG Line	S 500 e AMG Line L	S 600 AMG Line L	Mercedes-AMG S 63	Mercedes-AMG S 65
Automatic child seat recognition sensor Works in conjunction with Mercedes-Benz child seats fitted with transponder	●	●	●	●	●	●
Brake pad wear indicator – front brakes	●	●	●	●	●	●
COLLISION PREVENTION ASSIST PLUS	●	●	●	–	–	–
Crosswind Assist	●	●	●	●	●	●
Electric parking brake	●	●	●	●	●	●
Electronic Stability Programme (ESP®) with Acceleration Skid Control (ASR)	●	●	●	●	●	●
ESP® Curve Dynamic Assist	●	●	●	●	●	●
First-aid kit	●	●	●	●	●	●
Front passenger seat with PRE-SAFE® positioning function	●	●	●	●	●	●
Headlamp Assist – automatic headlamp activation	●	●	●	●	●	●
i-Size and ISOFIX child seat fixing points in rear (two outer seats)	●	●	●	●	●	●
Locking wheel bolts	●	●	●	●	●	●

● Standard ○ Optional – Not available

Item Safety and Assistance Systems (continued)	SE L	AMG Line	S 500 e AMG Line L	S 600 AMG Line L	Mercedes-AMG S 63	Mercedes-AMG S 65
Night View Assist Plus With early detection of people and large animals in the dark, including spotlight function and windscreen with heat and noise-insulating and infrared-reflecting glass	○	○	○	●	○	●
PRE-SAFE® anticipatory occupant protection system	●	●	●	●	●	●
PRE-SAFE® Impulse	●	●	●	●	●	●
Rain-sensing wipers – two-stage	●	●	●	●	●	●
Rear seat belt status indicator	●	●	●	●	●	●
Remote central locking	●	●	●	●	●	●
Seat belts, rear – three-point (3)	●	●	●	●	●	●
Seat belt pre-tensioners, belt force limiters and automatic belt height adjustment – front and outer rear seats	●	●	●	●	●	●
Service indicator ASSYST	●	●	●	●	●	●
Traffic Sign Assist Speed Limit Assist with wrong-way warning function and display of speed limit in instrument cluster	●	●	●	●	●	●
Tyre pressure monitoring system	●	●	●	●	●	●

Item Communications and In-Car Entertainment	SE L	AMG Line	S 500 e AMG Line L	S 600 AMG Line L	Mercedes-AMG S 63	Mercedes-AMG S 65
6-disc changer	○	○	○	●	●	●
Burmester® high-end 3D surround sound system 24 speakers and 24-channel amplifier with total output of 1,540 W	○	○	○	●	○	●
Burmester® surround sound system 13 speakers and 9-channel DSP amplifier with total output of 590 W	○	○	○	–	●	–
Central controller dial to operate audio functions and telephone (when connected)	●	●	●	●	●	●
COMAND Online system with Media Interface and touchpad Includes radio, single CD/DVD (6-disc changer for S 600 L), 12.3-inch colour display, hard disk drive (HDD) navigation with 3D map display, Live Traffic Information and European map data updates free of charge for the first three years, Speed Limit Assist and LINGUATRONIC voice control. Integrated WLAN hotspot for onboard access of WLAN-enabled devices. Also includes SD memory card slot, 10 GB music register and MP3 compatibility. Bluetooth® interface with high-definition call quality for hands-free telephony. Media Interface allows connection and control of portable media devices (e.g. MP3 player, USB storage media)	●	●	●	●	●	●

● Standard ○ Optional – Not available

Item Communications and In-Car Entertainment (continued)	SE L	AMG Line	S 500 e AMG Line L	S 600 AMG Line L	Mercedes-AMG S 63	Mercedes-AMG S 65
DAB digital radio tuner	●	●	●	●	●	●
Digital operating instructions	●	●	●	●	●	●
Head-up display Virtual colour image (21×7 cm) showing information such as vehicle speed directly in driver's field of vision	○	○	○	●	○	●
Mercedes me connect (additional services) Including programming of pre-entry climate control, route planning, retrieval of vehicle level of charge, programming of charging settings. Please contact your Retailer for availability of these services	–	–	●	–	–	–
Mercedes me connect (standard services) Including emergency call system (eCall), accident recovery, breakdown management and maintenance management; Mercedes-Benz apps and in-car internet access for Facebook, internet radio, sending routes from Google Maps™ to the vehicle, news and weather reports; internet-enabled mobile phone required	●	●	●	●	●	●
Near Field Communication Enables a convenient, wireless connection of the mobile phone with the vehicle's telematics simply by holding the mobile phone near the NFC logo on the head unit	●	●	●	●	●	●

Item	SE L	AMG Line	S 500 e AMG Line L	S 600 AMG Line L	Mercedes-AMG S 63	Mercedes-AMG S 65
Rear seat entertainment system Two 10-inch screeens on rear seat backrests, DVD player, two sets of wireless headphones and remote control for COMAND Online system	○	○	○	●	○	●
Rear seat telephony	○	○	○	●	○	●
Speakers with Frontbass	●	●	●	●	●	●
SPLITVIEW for COMAND Online system Allows different content to be displayed for driver and passenger	○	○	○	●	○	●
TV tuner – with digital reception capabilities (Discontinued from April 2017 production)	○	○	○	●	○	●
Universal Telephony package in armrest with universal interface for universal cradle, extended telephone functionality, charging function and LTE-compatible exterior aerial for optimum reception	○	○	○	●	○	●

● Standard ○ Optional – Not available

A revolution in style

Item	Notes			SE L	AMG Line	S 500 e AMG Line L	S 600 AMG Line L	Mercedes-AMG S 63	Mercedes-AMG S 65	Basic RRP excl. VAT (£)	Total RRP incl. VAT (£)
Wheels											
18" alloy wheels (4) – 5-twin-spoke design front: 245/50 tyres rear: 245/50 tyres			01R	●	–	–	–	–	–	–	–
19" alloy wheels (4) – 5-twin-spoke design front: 245/45 tyres rear: 275/40 tyres			R17	○	–	–	–	–	–	1,458.33	**1,750.00**
19" AMG alloy wheels (4) – 5-twin-spoke design front: 245/45 tyres rear: 275/40 tyres			793	–	●	●	●	–	–	–	–
20" AMG alloy wheels (4) – multi-spoke design front: 245/40 tyres rear: 275/35 tyres			769	–	○	○	○	–	–	650.00	**780.00**

● Standard ○ Optional – Not available

Item	Notes			SE L	AMG Line	S 500 e AMG Line L	S 600 AMG Line L	Mercedes-AMG S 63	Mercedes-AMG S 65	Basic RRP excl. VAT (£)	Total RRP incl. VAT (£)
Wheels (continued)											
19" AMG alloy wheels (4) – 10-spoke design front: 255/45 tyres rear: 285/40 tyres			788	–	–	–	–	●	–	–	–
20" AMG alloy wheels (4) – multi-spoke design front: 255/40 tyres rear: 285/35 tyres			696	–	–	–	–	–	●	–	–
20" AMG alloy wheels (4) – 10-spoke design front: 255/40 tyres rear: 285/35 tyres			647	–	–	–	–	○	–	808.33	**970.00**
				–	–	–	–	–	○	**no-cost option**	
20" AMG alloy wheels (4) – 10-spoke design, painted matt black front: 255/40 tyres rear: 285/35 tyres			648	–	–	–	–	○	–	1,450.00	**1,740.00**
				–	–	–	–	–	○	**no-cost option**	

● Standard ○ Optional – Not available

Driving Assistance package

For increased traffic safety, the S-Class can be equipped with the Driving Assistance package. DISTRONIC PLUS with Steering Assist and Stop&Go Pilot help the driver to maintain a safe distance to the vehicle in front and stay in lane, while BAS PLUS with Cross-Traffic Assist and PRE-SAFE® Brake helps to reduce the risk of accidents at junctions and in stop-start traffic. Active Lane Keeping Assist and Active Blind Spot Assist support the driver if they should inadvertently drift out of lane or risk collision with another vehicle while changing lanes.

Driving Assistance package – including luxury items as listed below.
Standard on S 600 L, Mercedes-AMG S 63 and Mercedes-AMG S 65
All other models **Total incl. VAT £1,695.00**

Driving Assistance package (code P20)
Active Blind Spot Assist
Active Lane Keeping Assist
BAS PLUS with Cross-Traffic Assist
DISTRONIC PLUS with Steering Assist and Stop&Go Pilot
PRE-SAFE® Brake and PRE-SAFE® PLUS

DISTRONIC PLUS

Active Lane Keeping Assist

Rear Seat Reclining package and Individual Rear Seats package

Reclining rear seat with additional leg and footrest (part of the Rear Seat Reclining package), as well as individual rear seats with folding rear tables (part of the Individual Rear Seats package) shown

Please note: left-hand drive car shown. For UK vehicles the reclining seat with leg rest and footrest is on the left, behind the passenger seat

Two separate packages, two ways to further enhance your comfort in the S-Class. The Rear Seat Reclining package features beautifully convenient elements like extended adjustment and luxury head restraints for the front seats, as well as reclining rear sets, and additional leg rest and footrest. It's available with either the Executive equipment line or the Individual Rear Seats package.

Rear Seat Reclining package – including luxury items as listed below.

Standard on S 600 L and Mercedes-AMG S 65

All other models **Total incl. VAT £1,500.00**

Rear Seat Reclining package (code DA4)
EASY ADJUST luxury front head restraints (code 439)
Front passenger seat with extended adjustment
Reclining rear seat (up to 43.5°) behind front passenger, and additional leg rest and footrest

The Individual Rear Seats package maximises the luxurious atmosphere. It allows you to adjust the backrest angle up to 37°, adds comfort-ventilation and electric adjustment with memory function. The rear seats even come with folding tables and temperature-controlled cupholders. This package is available individually or in conjunction with the Rear Seat Comfort package or the Rear Seat Reclining package.

Individual Rear Seats package – including luxury items as listed below.

S 600 L and Mercedes-AMG S 65 **Total incl. VAT £2,900.00**

All other models **VAT £5,000.00**

Individual Rear Seats package (code DA2)
Backrest angle adjustable up to 37°
Cup holders (2) – temperature-controlled
Individual rear seats and folding rear tables
Luxury rear head restraints with additional comfort cushion
Rear seats – comfort-ventilated
Rear seats – electrically adjustable with memory function
Stowage compartment with two 12 V sockets

Rear Seat Comfort package

The rear seat entertainment system features 10-inch screens

Burmester® surround sound system

Control of the energising massage function is available via COMAND Online

The Rear Seat Comfort package combines sublime comfort with a premium audio experience. It includes active multi-contour rear seats with a dynamic and a massage function. Individually adaptable air chambers in the multi-contour seats can be adjusted to the occupant's physique by using the COMAND Online controls. The dynamic function ensures the best support, especially when cornering: depending on steering angle and speed, the air pressure in the side bolsters is automatically increased for maximum lateral support. The seats even come with a massage function which allows you to choose between six settings, from relaxing to highly energising. For the most inspiring audio experience, there is the Burmester® surround sound system with thirteen high-performance speakers and a rear seat entertainment system. The passengers in the rear can independently access the DVD player connected with COMAND Online, radio, internet or television in conjunction with a TV receiver (optional), or connect external devices using the two USB and aux-in ports in the rear armrest. Two wireless headphones are also included.

The Rear Seat Comfort package is available exclusively with either the Executive equipment line or the Individual Rear Seats package. Also requires the Front Seat Memory package and EASY ADJUST luxury front head restraints.

Rear Seat Comfort package – including luxury items as listed below.

Standard on S 600 L and Mercedes-AMG S 65	
Mercedes-AMG S 63	**Total incl. VAT £2,370.00**
All other models	**£3,500.00**
With Premium Plus equipment line (code DP1)	**£2,995.00**

Rear Seat Comfort package (code DA3)
Active multi-contour rear seats with dynamic and massage function
Burmester® surround sound system (code 810)
Rear seat entertainment system (code P46)

Optional equipment

AMG Night package

Burmester® high-end 3D surround sound system

MAGIC SKY CONTROL

Privacy glass

Rear Seat Telephony

Universal Telephony package

Item	Notes		SE L	AMG Line	S 500 e AMG Line L	S 600 AMG Line L	Mercedes-AMG S 63	Mercedes-AMG S 65	Basic RRP excl. VAT (£)	Total RRP incl. VAT (£)
AMG Performance Studio										
AMG Driver's package Including restriction of top speed to 186 mph and participation in driver training at the AMG Driving Academy		250	–	–	–	–	○	–	2,300.00	**2,760.00**
			–	–	–	–	–	○	658.33	**790.00**
AMG Exterior Carbon Fibre Trim package Comprising cross strut on front apron, exterior mirror housings, inserts in rear apron and carbon fibre inserts in side sill panels		773	–	–	–	–	○	○	4,166.67	**5,000.00**
AMG high-performance ceramic composite brake system With composite brake discs, 420×40 mm front and 360×32 mm rear, as well as specially painted brake calipers with 'AMG Carbon Ceramic' lettering	Only in conjunction with 20" AMG alloy wheels (code 647, 648 or 696). Please check with your Retailer for availability	B07	–	–	–	–	○	○	5,908.33	**7,090.00**
AMG carbon fibre engine cover		B14	–	–	–	–	○	–	1,291.67	**1,550.00**
Air inlet grilles and flics on front apron in high-gloss black instead of high-gloss chrome		5U2	–	–	–	–	–	○		**no-cost option**
Brake calipers – painted red, with 'AMG' lettering	Not in conjunction with AMG high-performance ceramic composite brake system (code B07)	U70	–	–	–	–	○	○	516.67	**620.00**

● Standard ○ Optional – Not available

Item	Notes		SE L	AMG Line	S 500 e AMG Line L	S 600 AMG Line L	Mercedes-AMG S 63	Mercedes-AMG S 65	Basic RRP excl. VAT (£)	Total RRP incl. VAT (£)
Suspension and Exterior										
Night package AMG side sill panel inserts in high-gloss black AMG sport exhaust system with two black twin tailpipe trims in chrome finish Cross strut in front apron in high-gloss black Exterior mirror housings in high-gloss black Rear apron insert in high-gloss black	In conjunction with AMG Exterior Carbon Fibre Trim package (code 773)	P60	–	–	–	–	○	○	329.17	**395.00**
			–	–	–	–	○	○	612.50	**735.00**
360° camera	Replaces standard reversing camera	501	○	○	○	●	○	●	733.33	**880.00**
Charging cable for IEC 60309 3-pin industrial socket (mode 2) – 4 m, 8 A		B32	–	–	○	–	–	–	312.50	**375.00**
Charging cable for household socket (mode 2) – 8 m, 8 A	Replaces standard charging cable for household socket (mode 2) – 4 m, 8 A	B81	–	–	○	–	–	–		**no-cost option**
Charging cable for IEC 60309 3-pin industrial socket (mode 2) – 8 m, 8 A		B82	–	–	○	–	–	–	312.50	**375.00**
Charging cable for wallbox and public charging stations (mode 3) – 8 m, 16 A	Replaces standard charging cable for wallbox and public charging stations (mode 3) – 4m, 16 A	B83	–	–	○	–	–	–		**no-cost option**
MAGIC BODY CONTROL	S 500 L only. Only in conjunction with Driving Assistance package (code P20)	487	–	○	–	●	–	–	3,616.67	**4,340.00**
Omit model designation	Deletes model and engine badging. Retains central Mercedes-Benz star on boot lid. Not available for S 300 h L	260	○	○	–	○	–	–		**no-cost option**
Omit the following visual differentiation for PLUG-IN HYBRID: Blue front brake calipers Blue accentuating rings in headlamps		U53	–	–	○	–	–	–		**no-cost option**

● Standard ○ Optional – Not available

Item	Notes		SE L	AMG Line	S 500 e AMG Line L	S 600 AMG Line L	Mercedes-AMG S 63	Mercedes-AMG S 65	Basic RRP excl. VAT (£)	Total RRP incl. VAT (£)
Suspension and Exterior (continued)										
Privacy glass – dark glass from B-pillar backwards		840	○	○	○	–	○	–	333.33	**400.00**
			–	–	–	○	–	○		**no-cost option**
Tow bar, manually folding with electric release When ordering this option, please discuss with your Retailer any specific electrical towing requirements	Only available for S 350 d (L)	550	○	–	–	–	–	–	975.00	**1,170.00**
Paint, Trim and Upholstery										
Paint – designo allanite grey magno	Only in conjunction with electric panoramic glass sunroof (code 413). designo magno matt paint finishes require extra care. Please refer to the Owner's Manual for instructions	044	○	○	○	○	○	○	3,041.67	**3,650.00**
Paint – designo cashmere white magno		049	○	○	○	○	○	○	3,041.67	**3,650.00**
Paint – designo black mocha metallic	Only in conjunction with electric panoramic glass sunroof (code 413)	033	○	○	○	○	○	○	2,608.33	**3,130.00**
Paint – designo diamond white bright		799	○	○	○	○	○	○	633.33	**760.00**
Trim – AMG carbon fibre/black piano lacquer	Only in conjunction with Exclusive Nappa Leather package (code P34)	H10	○	○	○	○	○	○	2,400.00	**2,880.00**
Trim – black poplar wood		729	○	●	●	–	●	–	358.33	**430.00**
	In conjunction with Exclusive Nappa Leather package (code P34)		○	○	○	○	–	○		**no-cost option**
Trim – brown burr walnut wood		731	○	–	–	–	–	–	400.00	**480.00**
			–	○	○	–	○	–	41.67	**50.00**
	In conjunction with Exclusive Nappa Leather package (code P34)		○	○	○	○	–	○		**no-cost option**
Trim – designo black piano lacquer	Only in conjunction with Exclusive Nappa Leather package (code P34)	H21	○	○	○	○	○	○	1,025.00	**1,230.00**

● Standard ○ Optional – Not available

Item	Notes		SE L	AMG Line	S 500 e AMG Line L	S 600 AMG Line L	Mercedes-AMG S 63	Mercedes-AMG S 65	Basic RRP excl. VAT (£)	Total RRP incl. VAT (£)
Paint, Trim and Upholstery (continued)										
Trim – designo black piano lacquer flowing lines	Only in conjunction with Exclusive Nappa Leather package (code P34)	H16	○	–	–	–	○	○	1,633.33	**1,960.00**
			–	○	○	–	–	–	1,345.83	**1,615.00**
			–	–	–	○	–	–	820.82	**985.00**
Trim – designo brown sunburst myrtle wood	Only in conjunction with Exclusive Nappa Leather package (code P34) in black (code 501/561) or porcelain/black (code 515/585)	727	○	○	○	○	○	○	191.67	**230.00**
Trim – designo metallised ash wood	Only in conjunction with Exclusive Nappa Leather package (code P34) in black (code 501/561) or porcelain/black (code 515/585)	H06	○	○	○	○	○	○	316.67	**380.00**
Upholstery – Exclusive Nappa Leather package Armrests and lining of centre console in nappa leather with contrast stitching Colour contrast fluting on beltline DINAMICA microfibre roof lining Door panels with hand-stitched facings in nappa leather Exclusive nappa leather upholstery Extended trim parts: additional wood trim in door centre panels and rear air vent covers Nappa leather upper dashboard with diamond-pattern perforations and contrast stitching Perforated diamond pattern in continuation of front door armrests and in rear door seat function control panels Seats in nappa leather upholstery (featuring diamond pattern) with contrast stitching Trim – choice of black poplar or brown burr walnut wood trim (no-cost option)	Only in conjunction with either Executive equipment line (code DA1) or Individual Rear Seats package (code DA2) and Roller Blind package (code P09). On short wheelbase models, only in conjunction with electric panoramic glass sunroof (code 413) and Executive equipment line (code DA1)	P34	○	–	–	–	–	–	5,741.67	**6,890.00**
			–	○	○	–	–	–	5,441.67	**6,530.00**
	Only in conjunction with either Executive equipment line (code DA1) or Individual Rear Seats package (code DA2) and Roller Blind package (code P09)		–	–	–	●	○	●	3,991.67	**4,790.00**

● Standard ○ Optional – Not available

Item	Notes		SE L	AMG Line	S 500 e AMG Line L	S 600 AMG Line L	Mercedes-AMG S 63	Mercedes-AMG S 65	Basic RRP excl. VAT (£)	Total RRP incl. VAT (£)
Paint, Trim and Upholstery (continued)										
Upholstery – designo semi-aniline leather Additional to Exclusive Nappa Leather package (code P34) designo floor mats Quilted diamond pattern repeated in centre section of dashboard Seats in designo semi-aniline leather with exclusive diamond design additional to entire seat centre section, upholstery buttons, budapest piping and designo badges Available in: designo silk beige/titanium grey pearl P62 designo silk beige/satin red pearl P87	Only in conjunction with Exclusive Nappa Leather package (code P34) and Front Seat Memory package (code P64). For short wheelbase models, only in conjunction with electric panoramic glass sunroof (code 413). Not in conjunction with designo metallised ash wood trim (code H06)	'	○	○	○	○	–	–	2,666.67	**3,200.00**
	Only in conjunction with Exclusive Nappa Leather package (code P34). Not in conjunction with designo metallised ash wood trim (code H06)		–	–	–	–	○	○	658.33	**790.00**
Upholstery – nappa leather		'	○	○	○	–	○	–	1,450.00	**1,740.00**
Comfort										
AIR-BALANCE package – adjustable fragrancing with four different scents Fragrance generator with perfume flask in glove compartment Improved filter system between intake and distribution system Oxygen ioniser in side air duct		P21	○	○	○	●	○	●	300.00	**360.00**
Front Seat Comfort package Active multi-contour front seats with dynamic and massage function		432	○	○	○	●	●	●	1,450.00	**1,740.00**
Front Seat Memory package Additional four-way electric lumbar support for front passenger seat Front seats, luxury front head restraints, steering column and exterior door mirrors – electrically adjustable with memory	Standard on S 500 L	P64	○	○	●	●	●	●	416.67	**500.00**

● Standard ○ Optional – Not available

Item	Notes		SE L	AMG Line	S 500 e AMG Line L	S 600 AMG Line L	Mercedes-AMG S 63	Mercedes-AMG S 65	Basic RRP excl. VAT (£)	Total RRP incl. VAT (£)
Comfort (continued)										
Individual Rear Seats package Backrest angle adjustable up to 37° Comfort-ventilated rear seats Electrically adjustable rear seats with memory function Individual rear seats and folding rear tables Luxury rear head restraints with additional comfort cushion Stowage compartment with two 12 V sockets Temperature-controlled cup holders (2)	Long wheelbase models only. Not in conjunction with Executive equipment line (code DA1). Reduces boot capacity by 30 litres	DA2	○	○	○	–	○	–	4,166.67	**5,000.00**
			–	–	–	○	–	○	2,416.67	**2,900.00**
KEYLESS-GO Comfort package The vehicle can be conveniently unlocked, started and locked with this access and drive authorisation system – simply by carrying the electronic key. The engine can be switched on and off by pressing the start/stop button in the ignition lock. The hands-free access allows hands-off, fully automatic opening and closing of the boot lid by performing a kicking movement under the rear bumper. The package includes handle recess illumination so that the door handles are easily visible in dark lighting conditions		P17	○	○	○	●	●	●	1,241.67	**1,490.00**
Rear Seat Comfort package Active multi-contour outer rear seats with dynamic and massage function Burmester® surround sound system (code 810) Rear seat entertainment system (code P46)	The Rear Seat Comfort package is available exclusively with either the Executive equipment line (code DA1) or the Individual Rear Seats package (code DA2). Also requires the Front Seat Memory package (code P64) and EASY ADJUST luxury front head restraints (code 439)	DA3	○	○	○	●	–	–	2,916.67	**3,500.00**
			–	–	–	–	○	●	1,975.00	**2,370.00**
	With Premium Plus equipment line (DP1)		○	○	–	–	–	–	2,495.83	**2,995.00**

● Standard ○ Optional – Not available

Item	Notes		SE L	AMG Line	S 500 e AMG Line L	S 600 AMG Line L	Mercedes-AMG S 63	Mercedes-AMG S 65	Basic RRP excl. VAT (£)	Total RRP incl. VAT (£)
Comfort (continued)										
Rear Seat Reclining package EASY ADJUST luxury front head restraints (code 439) Front passenger seat with extended adjustment Reclining rear seat (up to 43.5°) behind front passenger and additional leg rest and footrest	Long wheelbase models only. Only in conjunction with Executive equipment line (code DA1) or Individual Rear Seats package (code DA2). Reduces boot capacity by 30 litres	DA4	○	○	○	●	○	●	1,250.00	**1,500.00**
Roller Blind package Electric roller blind for rear window and sun blinds for rear side windows	Included with Executive equipment line (code DA1)	P09	○	○	○	●	○	●	841.67	**1,010.00**
Warmth Comfort package Armrest heating in front and rear Heated multifunction steering wheel	Only in conjunction with heated rear seats (code 872) or Executive equipment line (code DA1) for short wheelbase models. Not available with dark brown eucalyptus wood trim (code 734). Only in conjunction with 2-spoke multifunction wood- and leather-trimmed steering wheel (code 289) for SE L or 3-spoke wood- and nappa leather-trimmed AMG sports steering wheel (code 314) for AMG Line	P69	○	○	○	●	○	●	441.67	**530.00**
Ashtray and cigarette lighter	Replaces stowage compartment and 12 V socket	301	○	○	○	–	○	–	66.67	**80.00**
			–	–	–	○	–	○		**no-cost option**
Closing aid for doors and boot lid	Included with Executive equipment line (code DA1), standard on S 500 L	883	○	○	●	●	–	–	508.33	**610.00**
EASY ADJUST luxury front head restraints	Only in conjunction with Front Seat Memory package (code P64), unless ordered as part of Rear Seat Reclining package (code DA4)	439	○	○	○	●	○	●	216.67	**260.00**
Electric panoramic glass sunroof		413	○	○	○	●	●	●	1,191.67	**1,430.00**
Front seats – comfort-ventilated, includes seat heating and cooling		401	○	○	○	●	○	●	550.00	**660.00**
Garage door opener – integrated in rear-view mirror For questions regarding compatibility please visit www.homelink.com		231	○	○	○	●	○	–	191.67	**230.00**

● Standard ○ Optional – Not available

Item	Notes		SE L	AMG Line	S 500 e AMG Line L	S 600 AMG Line L	Mercedes-AMG S 63	Mercedes-AMG S 65	Basic RRP excl. VAT (£)	Total RRP incl. VAT (£)
Comfort (continued)										
Heated windscreen	Only in conjunction with head-up display (code 463). Not in conjunction with TV tuner (code 865)	597	○	○	○	–	–	–	508.33	**610.00**
			–	–	–	–	○	–	366.67	**440.00**
	S 500 L and S 500 e		–	○	○	–	–	–	366.67	**440.00**
Infrared-reflective, noise-insulating glass all round	Standard on S 500 L	596	○	○	●	–	●	–	983.33	**1,180.00**
	In conjunction with Night View Assist Plus (code 610)		○	○	–	●	–	●	841.67	**1,010.00**
Panoramic roof with MAGIC SKY CONTROL – switchable transparency The large panoramic roof changes from dark to transparent or vice versa within a few seconds. In its tinted state it substantially reduces heating up of the vehicle interior		398	–	○	○	–	–	–	2,495.83	**2,995.00**
			–	–	–	○	○	○	1,304.17	**1,565.00**
Refrigerated compartment behind rear armrest	Reduces boot capacity by 40 litres	308	○	○	–	○	○	○	941.67	**1,130.00**
THERMOTRONIC – luxury automatic climate control, rear	Included with Executive equipment line (code DA1)	582	○	○	○	●	○	●	975.00	**1,170.00**
Steering										
Steering wheel – 2-spoke black designo leather/DINAMICA microfibre-trimmed AMG performance steering wheel		281	–	–	–	–	○	○	350.00	**420.00**
Steering wheel – 2-spoke multifunction wood- and leather-trimmed steering wheel	Only in conjunction with wood trims (code 729 or 731) or designo wood trims (code 727, H06, H10 or H21)	289	○	–	–	–	–	–	533.33	**640.00**
Steering wheel – 3-spoke wood- and nappa leather-trimmed AMG sports steering wheel 12 buttons, decorative stitching and silver-coloured aluminium gearshift paddles	Only in conjunction with wood trims (code 729 or 731) or designo wood trims (code 727, H06, H10 or H21)	314	–	○	○	●	○	○	525.00	**630.00**

● Standard ○ Optional – Not available

Item	Notes		SE L	AMG Line	S 500 e AMG Line L	S 600 AMG Line L	Mercedes-AMG S 63	Mercedes-AMG S 65	Basic RRP excl. VAT (£)	Total RRP incl. VAT (£)
Safety and Assistance Systems										
Driving Assistance package Active Blind Spot Assist, Active Lane Keeping Assist, BAS PLUS with Cross-Traffic Assist, DISTRONIC PLUS with Steer Assist and Stop&Go Pilot, PRE-SAFE® Brake and PRE-SAFE® PLUS		P20	○	○	○	●	●	●	1,412.50	**1,695.00**
Intelligent Rear Seat Belts package Illuminated seat belt buckle extenders facilitate seat belt fastening on outer rear seats Inflatable three-point seat belts with integrated belt bags on outer seats	Only in conjunction with Executive equipment line (code DA1) or Individual Rear Seats package (code DA2)	P36	○	○	○	●	○	●	829.17	**995.00**
Night View Assist Plus With early detection of people and large animals in the dark, including spotlight function and windscreen with heat and noise-insulating and infrared-reflecting glass		610	○	○	–	●	–	–	1,875.00	**2,250.00**
	S 500 L and Mercedes-AMG		–	○	○	–	○	●	1,733.33	**2,080.00**

● Standard ○ Optional – Not available

Item	Notes		SE L	AMG Line	S 500 e AMG Line L	S 600 AMG Line L	Mercedes-AMG S 63	Mercedes-AMG S 65	Basic RRP excl. VAT (£)	Total RRP incl. VAT (£)
Communications and In-Car Entertainment										
6-disc changer	Replaces standard single-disc changer	814	○	○	○	●	●	●	216.67	**260.00**
Burmester® surround sound system 13 speakers and 9-channel DSP amplifier with total output of 590 W. Includes voice amplification system which makes it easier to communicate with the rear passengers from the front. The two microphones in the interior mirror are also used to pick up speech for the hands-free telephone system. These signals are then discreetly amplified depending on the amount of driving noise, and continuously adjusted for the speaker's volume and the ambient noise level	Not in conjunction with Burmester® high-end 3D surround system (code 811). Included with Rear Seat Comfort package (code DA3)	810	○	○	○	–	●	–	941.67	**1,130.00**
Burmester® high-end 3D surround sound system 24 speakers and 24-channel amplifier with total output of 1,540 W. Includes voice amplification system which makes it easier to communicate with the rear passengers from the front. The two microphones in the interior mirror are also used to pick up speech for the hands-free telephone system. These signals are then discreetly amplified depending on the amount of driving noise, and continuously adjusted for the speaker's volume and the ambient noise level	Only in conjunction with Roller Blind package (code P09) with electric panoramic glass sunroof (code 413). Reduces luggage capacity by 40 litres. Not in conjunction with Burmester® surround sound system (code 810)	811	○	○	○	●	–	●	5,358.33	**6,430.00**
	Additionally in conjunction with Rear Seat Comfort package (code DA3)		○	○	○	–	○	–	4,416.67	**5,300.00**
	Only in conjunction with Roller Blind package (code P09). Reduces luggage capacity by 40 litres		–	–	–	–	○	–	4,416.67	**5,300.00**
Head-up display Virtual colour image (21×7 cm) showing information such as vehicle speed directly in driver's field of vision		463	○	○	–	–	–	–	1,025.00	**1,230.00**
	S 500 L and Mercedes-AMG		–	○	○	●	○	●	883,33	**1,060.00**
Rear seat entertainment system Two 10-inch screens on rear seat backrests, DVD player, two sets of wireless headphones and remote control for COMAND Online system	Only in conjunction with Burmester® or Burmester® high-end 3D surround sound systems (code 810 or 811) and EASY ADJUST luxury front head restraints (code 439) and Front Seat Memory package (code P64). Included with Rear Seat Comfort package (code DA3)	P46	○	○	○	●	○	●	2,041.67	**2,450.00**

● Standard ○ Optional – Not available

Item	Notes		SE L	AMG Line	S 500 e AMG Line L	S 600 AMG Line L	Mercedes-AMG S 63	Mercedes-AMG S 65	Basic RRP excl. VAT (£)	Total RRP incl. VAT (£)
Communications and In-Car Entertainment (continued)										
Rear seat telephony Handset with touchscreen and charger cradle, accommodated in the rear armrest or in the centre console in the rear with the Individual Rear Seats package Call transfer from the rear to the front and vice versa possible LTE-compatible aerial	Only in conjunction Rear seat entertainment system (code P46), Front Seat Memory package (code P64), EASY ADJUST luxury front head restraints (code 439), either Burmester® or Burmester® high-end 3D surround sound systems (code 810 or 811), and either Executive equipment line (code DA1) or Individual Rear Seats package (code DA2).	856	○	○	○	●	○	●	803.33	**970.00**
Remote control for COMAND Online system		816	○	○	○	–	○	–	133.33	**160.00**
SPLITVIEW for COMAND Online system Allows different content to be displayed for driver and passenger		867	○	○	○	●	○	●	683.33	**820.00**
TV tuner – with digital reception capabilities	Discontinued from April 2017 production	865	○	○	○	●	○	●	925.00	**1,110.00**
Universal Telephony package in armrest with universal interface for universal cradle, extended telephone functionality, charging function and LTE-compatible exterior aerial for optimum reception Smartphones can be conveniently connected to the onboard hands-free system via a universal interface in the armrest. For this, the smartphone is simply inserted into the universal smartphone cradle. This can be connected to the interface with a click within seconds. The use of the LTE-compatible exterior aerial ensures optimum reception and transmission. In addition the battery can be charged. The smartphone is conveniently operated using the onboard system. Access to the phone's internal memory is also possible in this way		386	○	○	○	●	○	●	341.67	**410.00**

● Standard ○ Optional – Not available

Item	Notes		SE L	AMG Line	S 500 e AMG Line L	S 600 AMG Line L	Mercedes-AMG S 63	Mercedes-AMG S 65	Basic RRP excl. VAT (£)	Total RRP incl. VAT (£)
Service Package										
Service Care Service Care allows you to spread the cost of servicing your new car in the Mercedes-Benz Retailer network. Taking out a Service Care plan ensures your servicing needs are taken care of by fully trained Mercedes-Benz Technicians with the added benefit of a Mercedes-Benz service history	Price is based on a monthly rate. Example given is for two services taken over 24 months or three services over 36 months. Further payment options are available. New Service Care prices apply only to vehicles up to 12 months old prior to first service. Prices effective from 3 May 2016	1	○	○	○	○	–	–	34.17	**41.00**
			–	–	–	–	○	○	37.50	**45.00**

● Standard ○ Optional – Not available

Genuine Accessories

We've developed a range of Accessories you can add to help personalise and enhance your S-Class. Your local Mercedes-Benz Retailer can advise on fitting costs of Accessories, where applicable. Further information on our full range of Genuine Accessories can be found on the Mercedes-Benz UK website.

01 | Shallow boot tub

The boot tub is suitable for transporting shopping. The tub shape with its slightly raised edge is precision-tailored to the load area. Made from impact-resistant, non-slip polypropylene.

RRP £106.50 (incl. VAT)

02 | EASY-PACK boot box

The EASY-PACK box makes optimum use of the space in the boot. The flexible box is ideal for secure, non-slip stowage of smaller items. It has a maximum load capacity of 10 kilograms and the roll-out mechanism means that the volume can be varied between 7 and 55 litres.

RRP £240.00 (incl. VAT), excluding fitting

03 | Stowage crate

A secure hold for items which are prone to tip over or slide around, e.g. shopping bags. Adjustable partitioning elements allow crate to be divided into max. 4 sections. Optimum functionality only in conjunction with shallow boot tub.

RRP £87.50 (incl. VAT)

04 | Concertina load sill protector

Foldable protective mat. Easy to attach. Protects bumper and load sill from scratches. Helps keep the load area clean. Helps protect clothing when loading boot or roof box. Can be connected to boot tub and reversible mat. Space-saving stowage. Easy to clean.

RRP £41.53 (incl. VAT)

05 | All-season floor mats

Made from robust, washable synthetic material for heavy use. Latest design with recessed areas and raised edge. With distinctive Mercedes star logo. Price includes both front and rear mats.

RRP £121.55 (incl. VAT)

06 | Flacon perfume atomiser

For vehicles with the Air Balance package. Flacons for perfume atomiser, 15 ml. Available in a variety of fragrances.

RRP £56.00 (incl. VAT)

07 | Alustyle basic carrier bars

Aluminium carrier bars, precision-tailored to the body of your Mercedes-Benz – the perfect basis for a range of Mercedes-Benz transport solutions: ski and snowboard rack, bicycle rack or roof boxes.

RRP £293.50 (incl. VAT)

08 | Mercedes-Benz roof boxes

An aerodynamic design, tailored to your Mercedes-Benz. In extremely durable material. Designed for quick, optimised attachment to the basic carrier bars. Particularly convenient loading and unloading thanks to the option of double-sided opening. Lockable from both sides. Available in various sizes.

RRP from £361.64 (incl. VAT)

Colours and materials

Metallic paints
Standard

183 magnetite black

890 cavansite blue

989 emerald green

197 obsidian black

897 ruby black

992 selenite grey

775 iridium silver

988 diamond silver

998 anthracite blue

designo paints
Additional-cost option

033 designo black mocha metallic

044 designo allanite grey magno

049 designo cashmere white magno

799 designo diamond white bright

Please note that, owing to limitations of on-screen representation, paint colours may differ from those shown

Leather
Standard (SE and AMG Line)

201 black

205 silk beige/espresso brown

208 crystal grey/seashell grey

214 nut brown/black

Nappa leather
Optional; standard on Mercedes-AMG S 63

801/851[1] black

805/855[1] silk beige/espresso brown

808/858[1] crystal grey/seashell grey

814/864[1] nut brown/black

815/865[1] porcelain/black

Exclusive nappa leather
Optional; standard on S 600 L and Mercedes-AMG S 65[2]

501/561[3] black

505/565[3] silk beige/espresso brown

508/568[3] crystal grey/seashell grey

514/584[3] nut brown/black

515/585[3] porcelain/black

designo nappa leather
Optional

P62 designo silk beige/titanium grey pearl

P87 designo silk beige/satin red pearl

Trim

727 designo brown sunburst myrtle wood[4]

729 black poplar wood[5]

731 brown burr walnut wood[6]

734 high-gloss dark brown eucalyptus wood[7]

H06 designo metallised ash wood[4]

H10 AMG carbon fibre/black piano lacquer[4]

H16 designo black piano lacquer flowing lines[4]

H21 designo black piano lacquer[4]

[1]Upholstery codes for Mercedes-AMG S 63 [2]Included with Exclusive Nappa Leather package (code P34) [3]Upholstery codes for Mercedes-AMG S 63 and Mercedes-AMG S 65 [4]Optional with Exclusive Nappa Leather package (code P34)
[5]Standard on AMG Line and Mercedes-AMG S 63, optional on SE and Mercedes-AMG S 65 [6]Optional [7]Standard on SE

Trim and upholstery combinations

	Leather/nappa leather/Exclusive nappa leather				Nappa leather/ Exclusive nappa leather
	black (201/801/851/501/561)	silk beige/espresso brown (205/805/855/505/565)	crystal grey/seashell grey (208/808/858/508/568)	nut brown/black (214/814/864/514/584)	porcelain/black (815/865/515/585)
Dashboard					
Steering wheel	black	silk beige	crystal grey	black	black
Upper dashboard trim	black	espresso brown	seashell grey	black	black
Centre dashboard trim	black	silk beige	crystal grey	nut brown	porcelain
Lower dashboard trim	black	silk beige	crystal grey	black	black
Seats					
Seat cushion centre section	black	silk beige	crystal grey	nut brown	porcelain
Side bolster trim	black	silk beige	crystal grey	nut brown	porcelain
Head restraint	black	silk beige	crystal grey	nut brown	porcelain
Contrast stitching	black	silk beige/espresso brown	crystal grey/seashell grey	nut brown/black	porcelain/black
Seat belt	black	silk beige	crystal grey	nut brown	black
Doors					
Door trim at beltline	black	espresso brown	seashell grey	black	black
Door centre panel	black	silk beige	crystal grey	nut brown	porcelain
Lower door trim	black	silk beige	crystal grey	black	black
Roof lining	black	porcelain	crystal grey	black	black
Parcel shelf	black	espresso brown	seashell grey	black	black
Floor covering					
Front and rear	black	silk beige	crystal grey	black	black
Boot	black	black	black	black	black

Combination options

Leather/nappa leather/Exclusive nappa leather	Metallic paints Standard	183 magnetite black	197 obsidian black	775 iridium silver	890 cavansite blue	897 ruby black	988 diamond silver	989 emerald green	992 selenite grey	998 anthracite blue	designo paints Additional-cost option	033 designo black mocha metallic	044 designo allanite grey magno	049 designo cashmere white magno	799 designo diamond white bright
black		●	●	●	●	●	●	●	●	●		●	●	●	●
silk beige/espresso brown		●	●	○	●	●	△	●	○	●		●	●	●	●
crystal grey/seashell grey		●	●	●	●	●	●	○	●	●		●	●	●	●
nut brown/black		●	●	●	●	△	●	●	●	●		●	●	●	●
porcelain/black		●	●	○	●	●	○	●	●	●		●	●	●	●

● Recommended ○ Possible △ Not recommended Please note that, owing to limitations of on-screen representation, paint colours may differ from those shown

Technical data

	Diesel hybrid	Diesel engine	Petrol hybrid	Petrol engines			
Model	S 300 h L	S 350 d/S 350 d L	S 500 e L	S 500 L	S 600 L	Mercedes-AMG S 63	Mercedes-AMG S 65
Engine							
Total displacement cc	2,143	2,987	2,996	4,663	5,980	5,461	5,980
Arrangement/cylinders/valves	in-line/4/16	V/6/24	V/6/24	V/8/32	V/12/36	V/8/32	V/12/36
Power[1] hp (kW) at rpm							
Combustion engine	204 (150)/3,800	258 (190)/3,600	333 (245)/ 5,250–6,000	455 (335)/ 5,250–5,500	530 (390)/ 4,900–5,300	585 (430)/5,500	630 (463)/ 4,800–5,400
Electric motor	27 (20)/1,800	–	116 (85)/3,500	–	–	–	–
System output	–	–	442 (325)/5,000	–	–	–	–
Torque[1] Nm at rpm							
Combustion engine	500/1,600–1,800	620/1,600–2,400	480/1,600–4,000	700/1,800–3,500	830/1,900–4,000	900/2,250–3,750	1,000/2,300–4,300
Electric motor	250/0–1,000	–	340/0–2,400	–	–	–	–
System output	–	–	650/–	–	–	–	–
Transmission							
7G-TRONIC PLUS 7-speed automatic	●	–	●	–	●	–	–
9G-TRONIC PLUS 9-speed automatic	–	●	–	●	–	–	–
AMG SPEEDSHIFT MCT 7-speed automatic sports transmission	–	–	–	–	–	●	–
AMG SPEEDSHIFT PLUS 7G-TRONIC 7-speed automatic transmission	–	–	–	–	–	–	●

● Standard ○ Optional – Not available [1] Figures according to Directive 80/1269/EEC in the currently applicable version

		Diesel hybrid	Diesel engine	Petrol hybrid	Petrol engines			
Model		S 300 h L	S 350 d/S 350 d L	S 500 e L	S 500 L	S 600 L	Mercedes-AMG S 63	Mercedes-AMG S 65
Performance								
Acceleration 0–62 mph [long]	sec	– [7.6]	6.8 [6.8]	– [5.2]	– [4.8]	– [4.6]	– [4.4]	– [4.3]
Top speed	mph	155[2]	155[2]	155[2]	155[2]	155[2]	155[2]	155[2]
Weights and capacities								
Kerb weight [long]	kg	– [2,035]	1,955 [1,975]	2,215 [–]	– [2,015]	– [2,185]	– [2,070]	– [2,250]
Perm. Gross Vehicle Weight [long]	kg	– [2,750]	2,655 [2,690]	2,825 [–]	– [2,730]	– [2,740]	– [2,700]	– [2,750]
Boot capacity	l	510	510	395	530	460	510	470
Fuel tank capacity/ of which reserve	l	70/8	70/8	70/8	80/8	80/8	80/10	80/12
Turning circle [long]	m	– [12.3]	11.9 [12.3]	– [12.3]	– [12.3]	– [12.3]	– [12.3]	– [12.3]
Fuel consumption[3,4]	mpg							
Urban [long]		– [60.1]	42.8 [42.2]	– [–]	– [24.6]	– [16.9]	– [20.5]	– [16.5]
Extra-urban[5] [long]		– [61.4]	57.7 [57.7]	– [–]	– [42.8]	– [32.8]	– [35.8]	– [32.8]
Combined [long]		– [61.4]	50.4 [52.3]	– [100.9]*	– [33.6]	– [24.6]	– [28.0]	– [23.7]

[2]Electronically limited [3]All figures are based on a standard specification with the smallest tyre size [4]The choice of wheels may affect CO_2 emissions and corresponding Road Fund Licence
[5]EUDC: extra-urban driving cycle. Testing procedures adhere to EU Directive 93/116 *The manufacturer's stated fuel consumption and electric range figures are based on the legally prescribed NEDC test cycle, which is performed in a laboratory. These are the only figures we are allowed to publish. It is common that differences occur in real driving conditions compared with these certified laboratory values. They result primarily from conditions different from the legally-prescribed laboratory conditions, for example when ambient temperatures differ (the weather is hot, cold, windy, wet), the vehicle is operated under different loads and many other factors. For several years, Mercedes-Benz has fully and actively supported the early introduction of the WLTP (Worldwide Harmonised Light Vehicles Test Procedure) and the measuring procedure for Real Driving Emissions (RDE). This procedure is designed to supersede the NEDC, with the goal of bringing standardised and real-world consumption closer together

	Diesel hybrid	Diesel engine	Petrol hybrid	Petrol engines			
Model	S 300 h L	S 350 d/S 350 d L	S 500 e L	S 500 L	S 600 L	Mercedes-AMG S 63	Mercedes-AMG S 65
Electric range							
Range in miles	– [–]	– [–]	approx. 19*	– [–]	– [–]	– [–]	– [–]
CO_2 emissions[4] g/km							
Emissions standard	EU6	EU6	EU6	EU6	EU6	EU6	EU6
18" alloy wheels – code 01R [long]	– [–]	– [141]	– [–]	– [–]	– [–]	– [–]	– [–]
19" alloy wheels – code R17 [long]	– [–]	– [148]	– [–]	– [–]	– [–]	– [–]	– [–]
19" alloy wheels – code 793 [long]	– [120]	146 [148]	– [65]	– [196]	– [268]	– [–]	– [–]
19" alloy wheels – code 788 [long]	– [–]	– [–]	– [–]	– [–]	– [–]	– [237]	– [279]
20" alloy wheels – code 769 [long]	– [126]	155 [157]	– [65]	– [206]	– [268]	– [–]	– [–]
20" alloy wheels – code 647 [long]	– [–]	– [–]	– [–]	– [–]	– [–]	– [237]	– [279]
20" alloy wheels – code 648 [long]	– [–]	– [–]	– [–]	– [–]	– [–]	– [237]	– [279]
20" alloy wheels – code 696 [long]	– [–]	– [–]	– [–]	– [–]	– [–]	– [–]	– [tba]
Insurance							
Group rating [long] – SE – AMG Line	– [–] – [47A]	– [49A] 49A [50A]	– [–] – [50A]	– [–] – [50A]	– [–] – [50A]	– [–] – [50A]	– [–] – [50A]
Insurance ratings may vary depending on model line and specification. Please refer to http://www.thatcham.org/abigrouprating/ for further details							

[4]The choice of wheels may affect CO_2 emissions and corresponding Road Fund Licence *The manufacturer's stated fuel consumption and electric range figures are based on the legally prescribed NEDC test cycle, which is performed in a laboratory. These are the only figures we are allowed to publish. It is common that differences occur in real driving conditions compared with these certified laboratory values. They result primarily from conditions different from the legally-prescribed laboratory conditions, for example when ambient temperatures differ (the weather is hot, cold, windy, wet), the vehicle is operated under different loads and many other factors. For several years, Mercedes-Benz has fully and actively supported the early introduction of the WLTP (Worldwide Harmonised Light Vehicles Test Procedure) and the measuring procedure for Real Driving Emissions (RDE). This procedure is designed to supersede the NEDC, with the goal of bringing standardised and real-world consumption closer together

Standard wheelbase

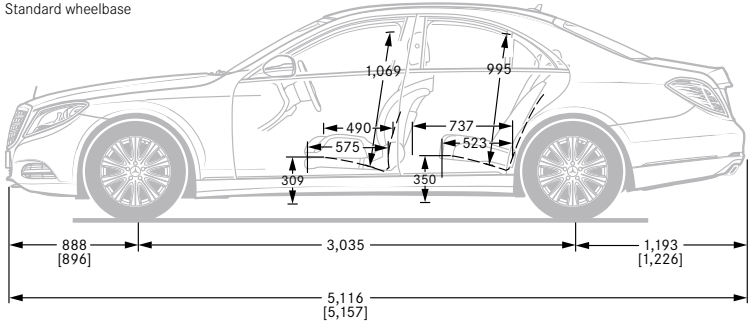

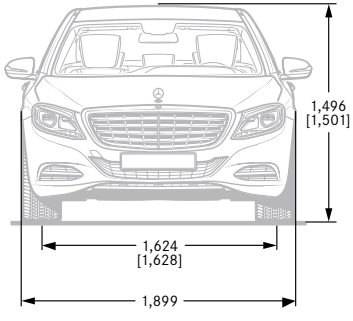

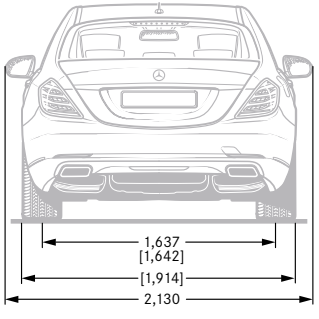

Long wheelbase

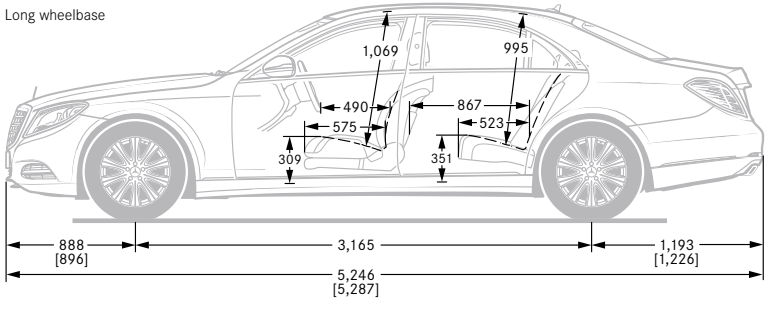

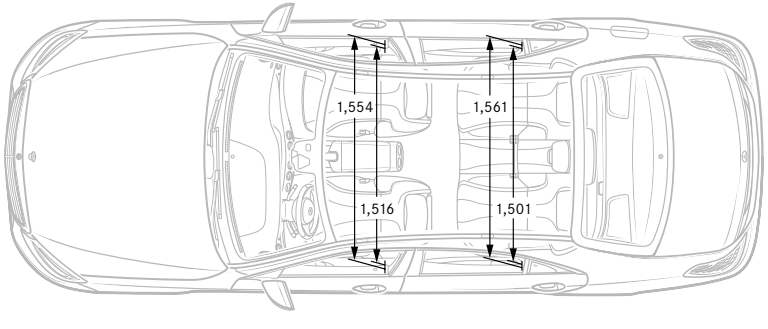

Figures in square brackets relate to Mercedes-AMG models. All measurements in millimetres. The dimensions shown are mean values and apply to standard-specification, unladen vehicles
The figures on pages 70–73 are correct at time of publication. Please refer to the government website for latest data – http://carfueldata.direct.gov.uk/

Road Fund Licence

All road vehicle registrations are subject to Vehicle Excise Duty (Road Fund Licence), which varies in accordance with the vehicle's CO_2 emissions. A first year rate for each taxation band will apply. The table below shows the bands (A–M) created by the DVLA and the corresponding Road Fund Licence. CO_2 emissions are listed in the technical data on page 72, and the relevant Excise Duty is reflected in the on-the-road prices on page 11.

Band	CO_2 emissions	First year rate (£)	Standard rate (£)	Premium rate (£)[1]
A	0 g/km	0.00	0.00	310.00
B	1 to 50 g/km	10.00	140.00	450.00
C	51 to 75 g/km	25.00	140.00	450.00
D	76 to 90 g/km	100.00	140.00	450.00
E	91 to 100 g/km	120.00	140.00	450.00
F	101 to 110 g/km	140.00	140.00	450.00
G	111 to 130 g/km	160.00	140.00	450.00
H	131 to 150 g/km	200.00	140.00	450.00
I	151 to 170 g/km	500.00	140.00	450.00
J	171 to 190 g/km	800.00	140.00	450.00
K	191 to 225 g/km	1,200.00	140.00	450.00
L	226 to 255 g/km	1,700.00	140.00	450.00
M	over 255 g/km	2,000.00	140.00	450.00

[1] Premium rate only applicable to vehicles where the list price is over £40,000 including any factory-fitted options, standard UK delivery charge, number plates, fuel and VAT

Services and insurance

Mercedes-Benz Service Care

We believe that servicing costs should be as flexible and affordable as possible for your S-Class, which is why we offer Service Care, an easy way to budget for all your servicing costs. It spreads your bills into manageable payments based on whether you have a new or used Mercedes-Benz.

With Service Care we guarantee the price of parts and labour for up to three services and safeguard against any further inflation. It also covers the cost of all recommended service items including brake fluid, spark plugs, air filters, fuel filters and screen wash.

You can choose either to add your servicing costs into your monthly spend or pay the full amount in a one-off payment, giving you peace of mind that they are taken care of for the period of the plan.

To receive a personalised Service Care plan recommendation visit the Service Care Calculator at servicecarerates.mercedes-benz.co.uk

Warranty and breakdown cover

Every Mercedes-Benz comes with a three-year unlimited mileage warranty against manufacturing or material defects[1] and up to 30 years warranty against perforation due to corrosion from the inside out.[2] What's more, it's also covered by Mercedes-Benz Roadside Assistance – a unique package comprising up to 30 years pan-European breakdown assistance.[2]

The following key components of the S 500 e AMG Line L are covered for six years or 62,000 miles (whichever comes sooner):

- High-voltage battery
- Electric motor
- Power electronics

Insurance

Since our name is synonymous with reliability, who better to trust with your motor insurance? Mercedes-Benz Insurance provides a motor insurance policy specifically designed to give you the cover you would expect from Mercedes-Benz. For a motor insurance quotation, call **0345 600 2180**.*

[1] Applies to vehicles sold by Mercedes-Benz in the UK to its franchised Retailers [2] Subject to full Terms and Conditions, dependent on date of registration, available upon request Mercedes-Benz Motor Insurance is underwritten by Aviva Insurance UK Limited. Credit provided, subject to status, by Mercedes-Benz Financial Services UK Ltd, MK15 8BA *For joint protection, calls may be recorded and/or monitored. All calls charged at local rate. We may decline to quote in some circumstances

Mercedes me connect

Mercedes me connect enables you to connect to your car via desktop, tablet or smartphone via an app. It provides access to services that enhance your Mercedes-Benz experience and fit effortlessly into your daily digital routine.

Standard Services.

Available on all models, except G-Class.

- **Emergency Call** – if there's an accident, this feature automatically shares your vehicle location and status for a fast response from the emergency services
- **Accident & Breakdown Management** – contact our Customer Assistance Centre with a single button for fast breakdown recovery
- **Telediagnostics** – automatically detects and shares details of any vehicle wear and tear with you, and shares the data with your Retailer
- **Maintenance Management** – reminds you when your service is due and automatically shares maintenance data with your Retailer
- **Parking Time Assist** – track the time on your parking meter and receive an alert when it's due to expire

Vehicle Setup.

These services come as standard if you have COMAND Online. Available as an optional £69 upgrade for all other customers.

- **Personal Profile** – store your preferences, such as your favourite radio stations and apps, to create your personal driver profile
- **Maintenance (Vehicle Status)** – check safety information, such as coolant level and brake pad condition, so you can be sure your car is safe and ready to drive
- **Remote Door Unlock** – lock and unlock your car remotely, wherever you are in the world
- **Send to Car Function** – search for destinations on your smartphone, tablet or desktop, then send the routes direct to your car for navigation

Remote Online Services.

Standard on all models with COMAND Online, except for new E-Class. Available to purchase for an additional £150.00 (incl. VAT) for all models without COMAND Online.

- **Trip information and vehicle status** – access the vehicle's trip data such as fuel level, mileage, condition of brake pads and tyre pressure
- **Remote door locking and unlocking** – lock and unlock your car remotely, wherever you are in the world
- **Geofencing** – set up a geographical boundary and receive alerts whenever your car enters or leaves this area
- **Parked Vehicle Locator** – locate your parked vehicle within a range of one mile and plot a route back to it
- **Vehicle Tracker** – track the location of your car anywhere in the world

Additional services for Plug-In Hybrid and electric models only, as part of Remote Online services:

- **Pre-entry climate control** – activate the pre-entry climate control system of your parked vehicle and set the temperature to your liking before boarding
- **Route planning** – displays the electric operating range on a map and enables you to plan a route while stopping at public charging stations
- **Charging points** – displays a list of the nearest public charging stations
- **Charging profile** – control the charging settings from a distance so your vehicle can be ready charged when you need it

Vehicle Monitoring.

Standard with COMAND Online for all models, except the new E-Class. Available to purchase for new E-Class and all other customers as an additional £69 upgrade.

- **Geo-fencing** – set up a geographical boundary and receive alerts whenever your car enters or leaves this area
- **Parked Vehicle Locator** – locate your parked car when within 1 mile and plot a route back to it
- **Vehicle Tracker** – track the location of your car anywhere in the world

Visit the Mercedes me connect store for more information:
shop.mercedes-benz.com/en-gb/connect

Mercedes me

Mercedes-Benz Finance

Why should you finance with Mercedes-Benz?

At Mercedes-Benz we believe a great driving experience should be matched by an equally great ownership experience. That is why we put just as much thought, time and effort into designing our finance options, our service plans and our insurance cover as we do into our vehicles.

We are not in the business of simply providing a loan to fund the purchase of your dream vehicle. We look on it as a journey that we take with you, from the moment you choose your new Mercedes-Benz, to helping you in choosing your next one.

If you would like to find out more about any of our current offers, simply call into your local Mercedes-Benz Retailer where one of our Business Managers will be more than happy to talk you through anything you need to know.

Helping you find the right solution.

You should find our finance packages are more convenient than a traditional personal loan because:

- Funds are immediately available – no waiting for cheques or loans to clear.
- There is no security required – either against your home or other assets.
- We have clear and transparent rates – the APR we quote is the APR you get.
- We have friendly Business Managers – experts in vehicle finance who can talk you through all of your plans in detail.

One of our most popular finance products is Mercedes-Benz Agility (our Personal Contract Purchase product). We also offer Contract Hire, Operating Lease and Hire Purchase solutions. If you would like to find out more about these speak to your Retailer or visit www.mercedes-benz.co.uk/fandi.

Mercedes-Benz Agility (our PCP product).

At the start of an Agility agreement, you put down a deposit and decide the term of your agreement and your annual mileage. You will be advised of the Guaranteed Future Value, which offers you the reassurance of knowing exactly what you will need to pay to own the vehicle outright in the future (this is known as the Optional Purchase Payment).

Throughout your agreement you simply pay your agreed monthly payments and when the agreement comes to an end you either purchase, hand back or part-exchange your vehicle.

Agility features:

- Fixed regular payments mean you can easily budget.
- Payments are based only on a proportion of the vehicle's value, keeping your monthly payments lower.
- Our Guaranteed Future Value avoids the risk of unplanned depreciation of your vehicle.
- You defer your ownership decision until the end of the agreement.

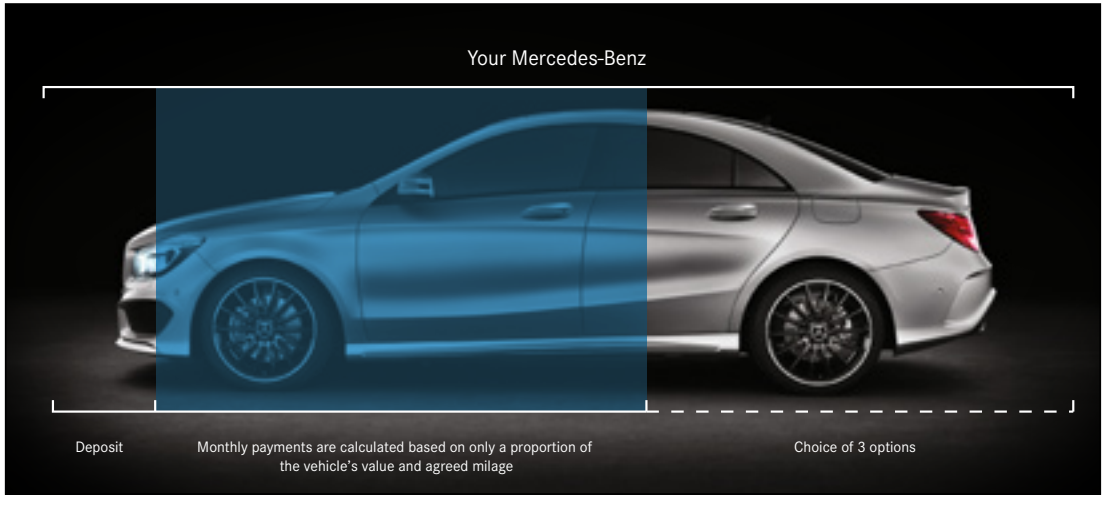

At the end of your agreement you have three options to choose from.

Option 1: Purchase your Mercedes-Benz.
Purchase your Mercedes-Benz by paying the Optional Purchase Payment and Purchase Activation Fee.[1] This will complete the purchase of your Mercedes-Benz, leaving you free to simply enjoy your vehicle.

Option 2: Hand back your Mercedes-Benz.
If you decide to return your vehicle to us, it must be in line with our Vehicle Return Standards,* as vehicle condition, excess mileage and other charges may be payable.

Option 3: Part-Exchange for a new vehicle.
Purchase your Mercedes-Benz by paying the Optional Purchase Payment and Purchase Activation Fee.[1] This will complete the purchase of your Mercedes-Benz, leaving you free to part-exchange for a new vehicle.

[1]Please note the 'Purchase Activation Fee' of £10 will be debited from your account *To find out more information about our Vehicle Return Standards please visit http://mercedes-benz.co.uk/vrs

Chargemaster Homecharge – simple steps to effortless charging

When you purchase a Mercedes-Benz plug-in vehicle we recommend Chargemaster, our preferred charging partner.
The 3.6 kW Chargemaster Homecharge allows you to charge your electric car in just 2 hours.[1]

Key benefits of the 3.6 kW Chargemaster Homecharge:
60% faster than a 13 A plug[1]
Ergonomic styling, robust and weatherproof, for indoor or outdoor use
Designed for users with a domestic address and off-street parking
Available with £500 OLEV Electric Vehicle Homecharge Scheme (EVHS) Grant (for eligible customers only)[2]
Key-controlled access for added security
POLAR plus network card providing access to the UK's largest public charging infrastructure, with over 5,000 charging points
Three year product warranty included

HOMECHARGE 3.6 kW: £279* inc. VAT & installation

Simple steps to Chargemaster Homecharge:

- Fill in the application form at www.chargemasterplc.com
- Chargemaster will contact you to discuss your household electrics and arrange for specialist installation within two weeks

For further information please contact:
mercedes-benz@chargemasterplc.com or call **01582 399 412**

chargemaster
powering the future

Chargemaster is the UK's leading provider of domestic charging solutions, trusted by more than 50,000 users across the UK and Europe. Manufactured in the UK, Chargemaster offers a wide range of installation services, choice of power output, and flexible data and security options to suit your requirements.

[1] Based on 3.6 kW power output for plug-in hybrid vehicles
[2] The Chargemaster Homecharge £500 Grant (including VAT) is only available to customers who meet the criteria of the Office of Low Emission Vehicles (OLEV) and is provided and installed by Chargemaster plc. For full details and eligibility criteria for the OLEV EVHS Grant, see https://www.gov.uk/government/publications/electric-vehicle-homecharge-scheme-guidance-for-customers-version-21. For full Chargemaster Homecharge Terms & Conditions visit https://chargemasterplc.com/terms_conditions
*Price includes £500 OLEV EVHS Grant. Price correct at time of publication, subject to change

Follow us on the following social media channels:

facebook.com/mercedesbenzuk

twitter.com/mercedesbenzuk

youtube.com/mercedesbenzuk

instagram.com/mercedesbenzuk

Effective from 21 March 2017 Production. Information correct at time of publication.
Prices and specifications are subject to change without prior notice.
MBWV222PL/0417 MY 807

Mercedes-Benz Cars UK Limited, Tongwell, Milton Keynes, MK15 8BA. Company number 2448457 www.mercedes-benz.co.uk